Sales Code: PRC102 **Barcode:** 5055369058327 **Brand:** nuie **Description:** nuie Mayford 550mm White Floor Standing Vanity Unit



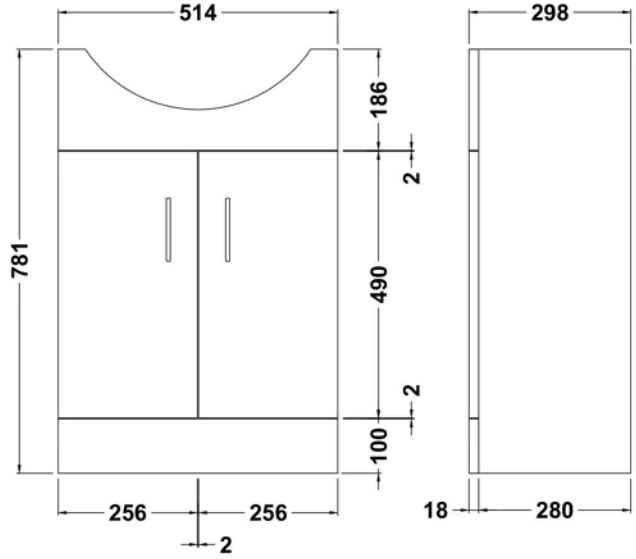

Product Dimensions

Product	781 x 514 x 298mm (H x W x D)
Packaged	325 x 540 x 815mm (H x W x D)
Nett Weight	15.8 kg
Packaged Weight	16.8 kg

Packaging Details

Box Qty	1

Product Details

Country of Origin	China
Product Material	Mdf Painted Gloss
Colour/Finish	White
Mount Type	Floor
Style	Contemporary
Handle Type	D Shape
Construction Method	Cam & Wood Dowel
Construction Type	Rigid
Fascia Finish	Mdf Painted Gloss
Fsc Certified	Yes
Handles Included	Yes
Leg Set Included	No
Material Thickness	16 mm
No. Doors	2
No. Shelves	1
Number Of Shelves	1

© ROXOR Group