Sales Code: PP739SB

Barcode: 5056817792442

Brand: nuie Choice

Description: nuie choice Axis 650mm Satin Soft Black 2 Door Floor Standing Cabinet With U-Shaped Basin



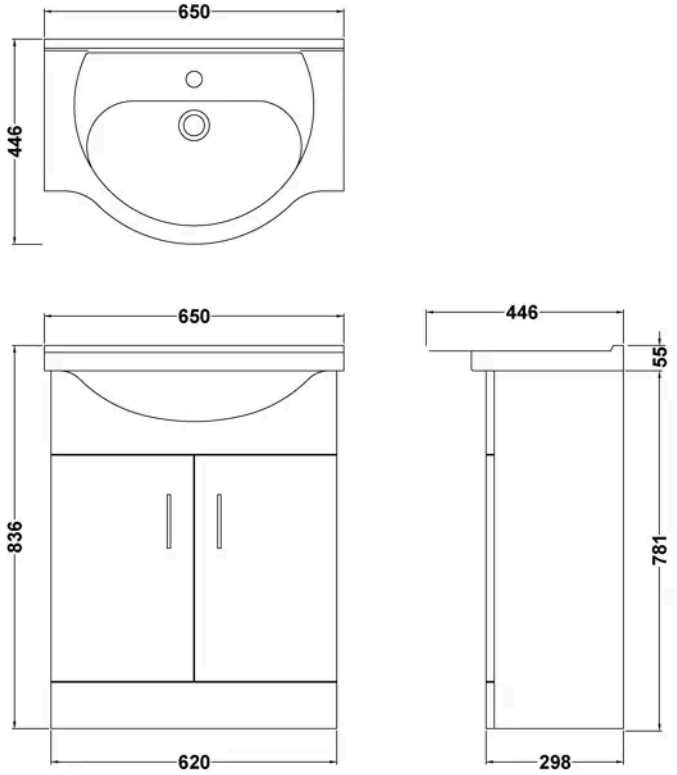

Product Dimensions

Product	836 x 650 x 446mm (H x W x D)
Nett Weight	36.68 kg
Packaged Weight	36.68 kg

Packaging Details

Box Qty	2

Product Details

Country of Origin	China
Product Material	Mfc Painted Gloss
Colour/Finish	Soft Satin Black
Mount Type	Floor
Style	Contemporary
Handle Type	D Shape
Construction Method	Cam & Wood Dowel
Construction Type	Rigid
Fascia Finish	Mdf Painted Gloss
Fsc Certified	Yes
Handles Included	Yes
Inner Bowl Depth	265 mm
Inner Bowl Height	115 mm
Inner Bowl Width	460 mm
Leg Set Included	No
Material Thickness	16 mm
No. Doors	2
No. Of Tapholes	1
No. Shelves	1
Number Of Bowls	1
Number Of Shelves	1
Overflow Included	Yes
Tap Included	No
Waste Included	No
Waste Shroud	No

© ROXOR Group

Sales Code: AXBC003 **Barcode:** 5056883761052 **Brand:** nuie Choice **Description:** Classic 650mm 1T/H Basin



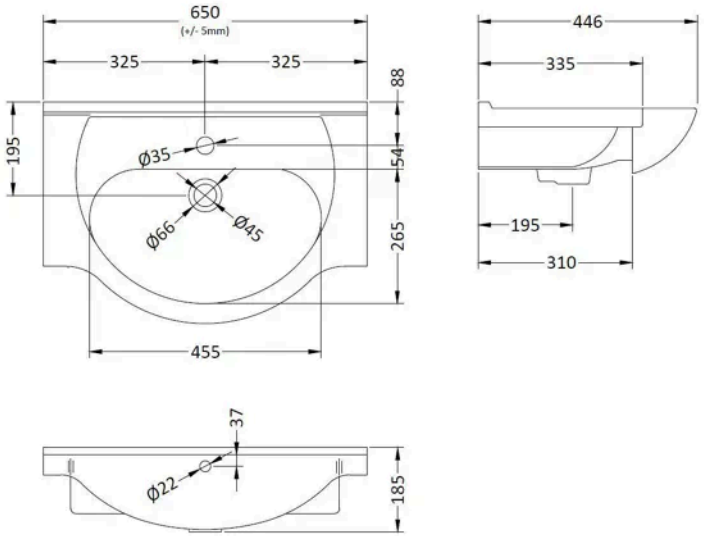

Product Dimensions

Product	185 x 650 x 446mm (H x W x D)
Packaged	470 x 670 x 200mm (H x W x D)
Nett Weight	16.5 kg
Packaged Weight	17.18 kg

Packaging Details

Box Qty	1

Product Details

Country of Origin	China
Product Material	Vitreous China
Colour/Finish	White
Ce Certified	Yes
Inner Bowl Height	115 mm
No. Of Tapholes	1
Number Of Bowls	1

© ROXOR Group

Sales Code: AXRC1403 **Barcode:** 5056883761021 **Brand:** nuie Choice **Description:** 650 PR Std Basin Unit Soft Black



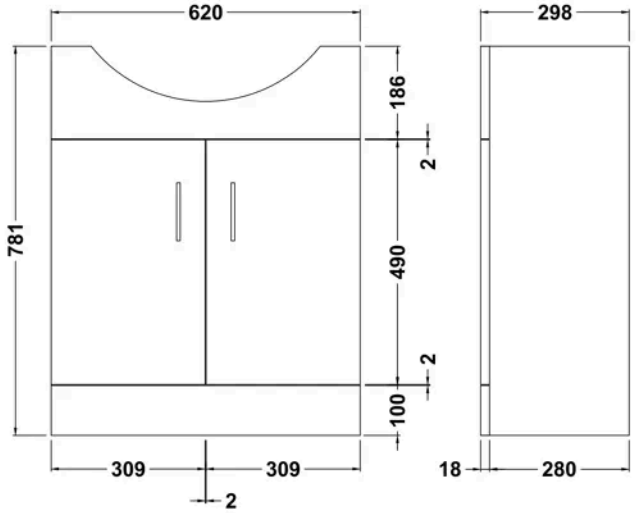

Product Dimensions

Product	781 x 620 x 298mm (H x W x D)
Packaged	325 x 645 x 815mm (H x W x D)
Nett Weight	19.5 kg
Packaged Weight	19.5 kg

Packaging Details

Box Qty	1

Product Details

Country of Origin	China
Product Material	Mdf Painted Matt
Colour/Finish	Soft Black
Mount Type	Floor
Style	Contemporary
Handle Type	D Shape
Construction Method	Cam & Wood Dowel
Construction Type	Rigid
Fascia Finish	Mdf Painted Matt
Fsc Certified	Yes
Handles Included	Yes
Leg Set Included	No
Material Thickness	16 mm
No. Doors	2
No. Shelves	1
Number Of Shelves	1

© ROXOR Group