Sales Code: PP620 **Barcode:** 5056817729660 **Brand:** nuie Choice **Description:** nuie choice Axis 550mm Gloss white 2 Door Floor Standing Cabinet With Square Basin



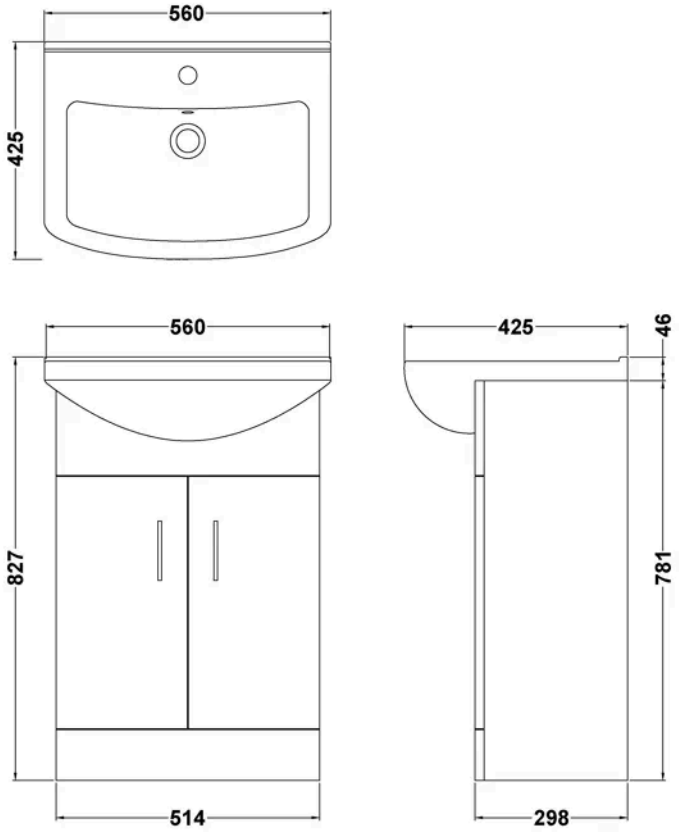

Product Dimensions

Product	836 x 550 x 425mm (H x W x D)
Nett Weight	29.8 kg
Packaged Weight	29.8 kg

Product Details

Country of Origin	China
Product Material	Mfc Painted Gloss
Colour/Finish	Gloss White
Mount Type	Floor
Style	Contemporary
Handle Type	D Shape
Construction Method	Cam & Wood Dowel
Construction Type	Rigid
Fascia Finish	Mdf Painted Gloss
Fsc Certified	Yes
Handles Included	Yes
Inner Bowl Height	110 mm
Leg Set Included	No
Material Thickness	16 mm
No. Doors	2
No. Of Tapholes	1
No. Shelves	1
Number Of Bowls	1
Number Of Shelves	1
Overflow Included	Yes
Tap Included	No
Waste Included	No
Waste Shroud	No

© ROXOR Group

Sales Code: AXBC102 **Barcode:** 5056883760970 **Brand:** nuie Choice **Description:** 550 Deluxe Basin 1Th (300 Deep)



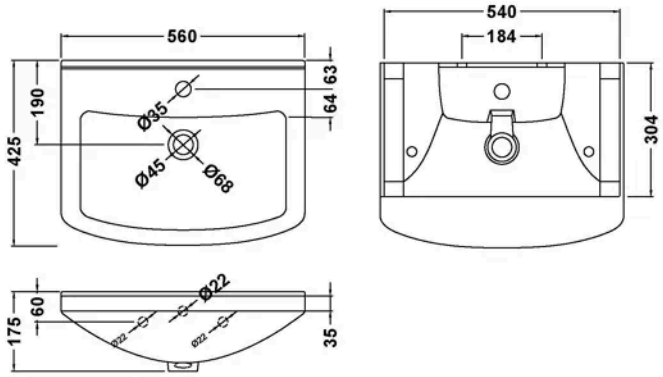

Product Dimensions

Product	175 x 560 x 425mm (H x W x D)
Packaged	450 x 190 x 580mm (H x W x D)
Nett Weight	13 kg
Packaged Weight	13 kg

Product Details

Country of Origin	China
Product Material	Vitreous China
Colour/Finish	White
Ce Certified	Yes
No. Of Tapholes	1
Number Of Bowls	1

© ROXOR Group

Sales Code: AXRC102 **Barcode:** 5056883760987 **Brand:** nuie Choice **Description:** 550 PR Std Basin Unit



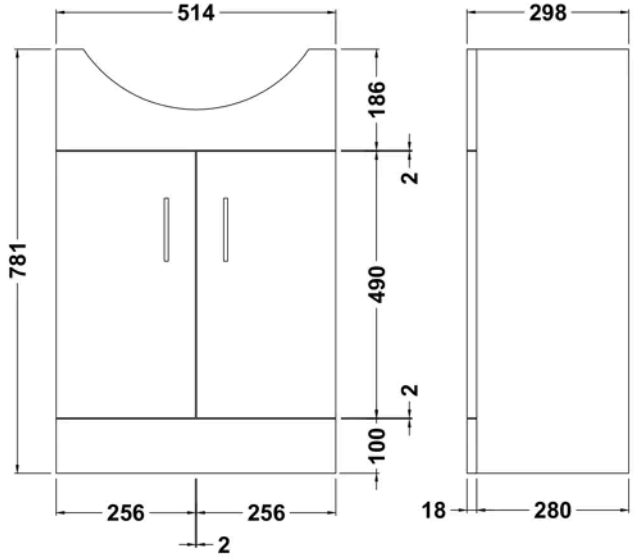

Product Dimensions

Product	781 x 514 x 298mm (H x W x D)
Packaged	325 x 540 x 815mm (H x W x D)
Nett Weight	15.8 kg
Packaged Weight	16.8 kg

Product Details

Country of Origin	China
Product Material	Mdf Painted Gloss
Colour/Finish	White
Mount Type	Floor
Style	Contemporary
Handle Type	D Shape
Construction Method	Cam & Wood Dowel
Construction Type	Rigid
Fascia Finish	Mdf Painted Gloss
Fsc Certified	Yes
Handles Included	Yes
Leg Set Included	No
Material Thickness	16 mm
No. Doors	2
No. Shelves	1
Number Of Shelves	1

© ROXOR Group