Sales Code: PP520 **Barcode:** 5056817729615 **Brand:** nuie Choice **Description:** nuie choice Axis 450mm Gloss white 1 Door Floor Standing Cabinet With U-Shaped Basin



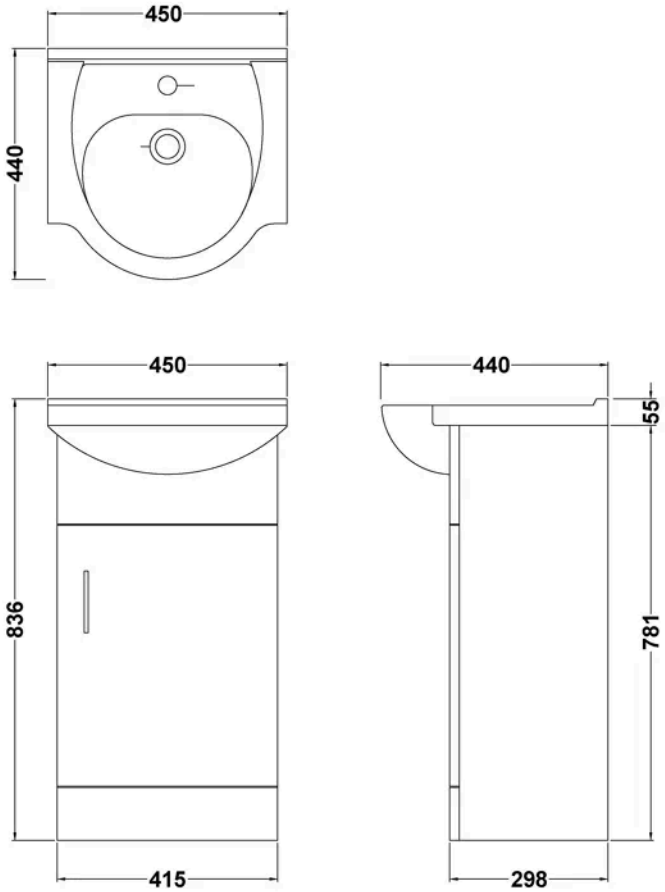

Product Dimensions

Product	836 x 450 x 440mm (H x W x D)
Packaged	325 x 440 x 815mm (H x W x D)
Nett Weight	26.58 kg
Packaged Weight	26.58 kg

Product Details

Country of Origin	China
Product Material	Mfc Painted Gloss
Colour/Finish	Gloss White
Mount Type	Floor
Style	Contemporary
Handle Type	D Shape
Construction Method	Cam & Wood Dowel
Construction Type	Rigid
Fascia Finish	Mdf Painted Gloss
Fsc Certified	Yes
Handles Included	Yes
Inner Bowl Depth	225 mm
Inner Bowl Height	140 mm
Inner Bowl Width	385 mm
Leg Set Included	No
Material Thickness	16 mm
No. Doors	1
No. Of Tapholes	1
No. Shelves	1
Number Of Bowls	1
Number Of Shelves	1
Overflow Included	Yes
Tap Included	No
Waste Included	No
Waste Shroud	No

© ROXOR Group

Sales Code: AXBC001 **Barcode:** 5056883760949 **Brand:** nuie Choice **Description:** Classic 450mm 1T/H Basin



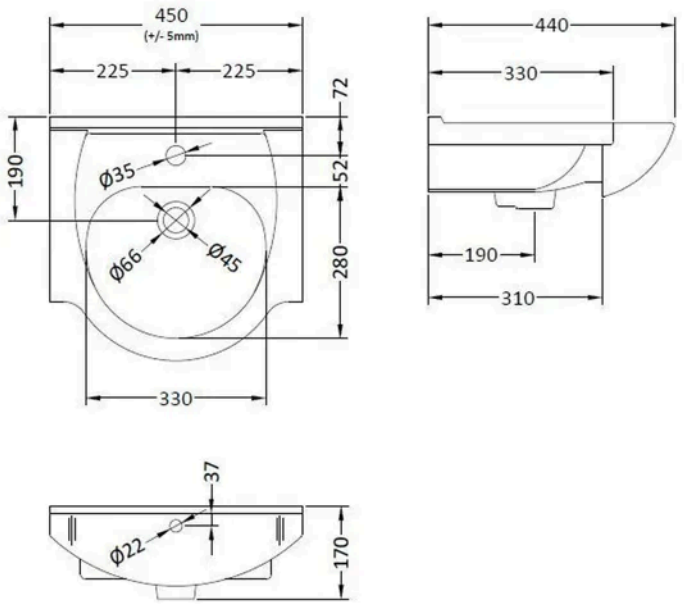

Product Dimensions

Product	170 x 450 x 440mm (H x W x D)
Packaged	470 x 460 x 190mm (H x W x D)
Nett Weight	12 kg
Packaged Weight	12.56 kg

Product Details

Country of Origin	China
Product Material	Vitreous China
Colour/Finish	White
Ce Certified	Yes
Inner Bowl Height	140 mm
No. Of Tapholes	1
Number Of Bowls	1

© ROXOR Group

Sales Code: AXRC101 **Barcode:** 5056883760956 **Brand:** nuie Choice **Description:** 450 PR Std Basin Unit



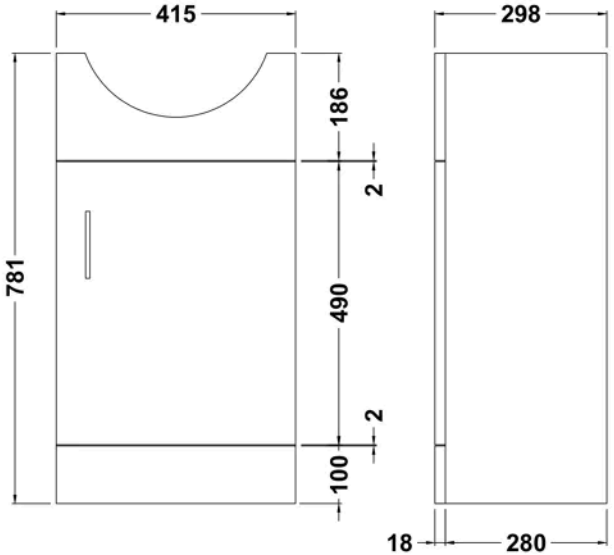

Product Dimensions

Product	781 x 415 x 298mm (H x W x D)
Packaged	325 x 440 x 815mm (H x W x D)
Nett Weight	14.02 kg
Packaged Weight	14.02 kg

Product Details

Country of Origin	China
Product Material	Mdf Painted Gloss
Colour/Finish	White
Mount Type	Floor
Style	Contemporary
Handle Type	D Shape
Construction Method	Cam & Wood Dowel
Construction Type	Rigid
Fascia Finish	Mdf Painted Gloss
Fsc Certified	Yes
Handles Included	Yes
Leg Set Included	No
Material Thickness	16 mm
No. Doors	1
No. Shelves	1
Number Of Shelves	1

© ROXOR Group