Sales Code: PMP1492 **Barcode:** 5056462618586 **Brand:** nuie **Description:** nuie Parade 600mm Soft Black 2 Door Floor Standing Vanity Unit



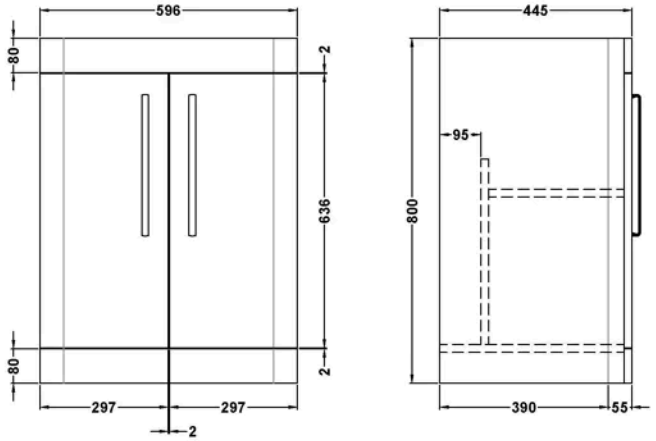

Product Dimensions

Product	800 x 596 x 445mm (H x W x D)
Packaged	850 x 600 x 455mm (H x W x D)
Nett Weight	25 kg
Packaged Weight	25 kg

Packaging Details

Box Qty	1

Product Details

Country of Origin	China
Product Material	Mdf Painted Matt
Colour/Finish	Soft Black
Mount Type	Floor
Style	Contemporary
Construction Method	Cam & Wood Dowel
Construction Type	Rigid
Fascia Finish	Mfc Painted Matt
Material Thickness	18 mm
No. Doors	2

© ROXOR Group