Sales Code: PMB411R **Barcode:** 5056211874195 **Brand:** nuie **Description:** nuie 1100mm 1 Tap Hole Right Hand Polymarble L-Shaped Basin



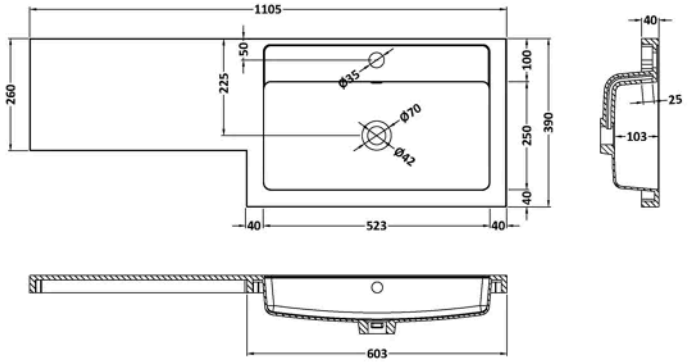

Product Dimensions

Product	135 x 390 x 1105mm (H x W x D)
Packaged	190 x 420 x 1160mm (H x W x D)
Nett Weight	16 kg
Packaged Weight	16.5 kg

Packaging Details

Box Qty	1

Product Details

Country of Origin	China
Product Material	Polymarble
Colour/Finish	White
Style	Contemporary
Ce Certified	Yes
Inner Bowl Height	103 mm
No. Of Tapholes	1
Overflow Cover Included	Yes
Overflow Included	Yes
Tap Included	No
Waste Included	No

© ROXOR Group