Sales Code: OVFL07U **Barcode:** 5056883741214 **Brand:** nuie **Description:** nuie Oval Brushed Pewter Basin Overflow Cover



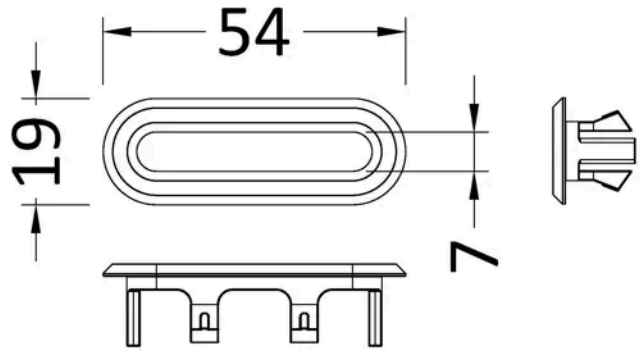

Product Dimensions

Product	30 x 30 x 15mm (H x W x D)
Packaged	30 x 30 x 30mm (H x W x D)
Nett Weight	0.2 kg
Packaged Weight	0.2 kg

Product Details

Country of Origin	China
Product Material	Brass Abs
Colour/Finish	Brushed Pewter
Style	Contemporary
Fixings Included	Yes

© ROXOR Group