Sales Code: NVF801F **Barcode:** 5056462657967 **Brand:** nuie **Description:** nuie Arno 500mm Satin Green 2 Door Floor Standing Vanity Unit



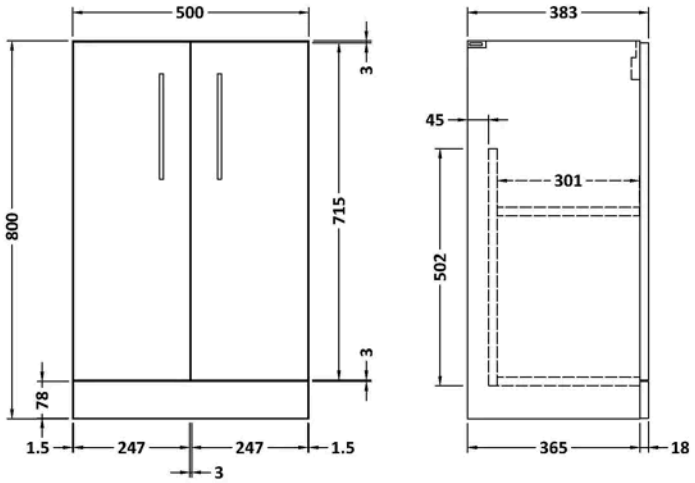

Product Dimensions

Product	800 x 500 x 383mm (H x W x D)
Packaged	835 x 520 x 375mm (H x W x D)
Nett Weight	17.5 kg
Packaged Weight	18 kg

Packaging Details

Box Qty	1

Product Details

Country of Origin	China
Product Material	Mdf Painted Matt
Colour/Finish	Satin Green
Mount Type	Floor
Style	Contemporary
Construction Method	Cam & Wood Dowel
Construction Type	Rigid
Fascia Finish	Mfc Painted Matt
Material Thickness	18 mm
No. Doors	2

© ROXOR Group