Sales Code: NVF2501 **Barcode:** 5056462659978 **Brand:** nuie **Description:** nuie Arno 500mm Solace Oak 2 Door Floor Standing Vanity Unit



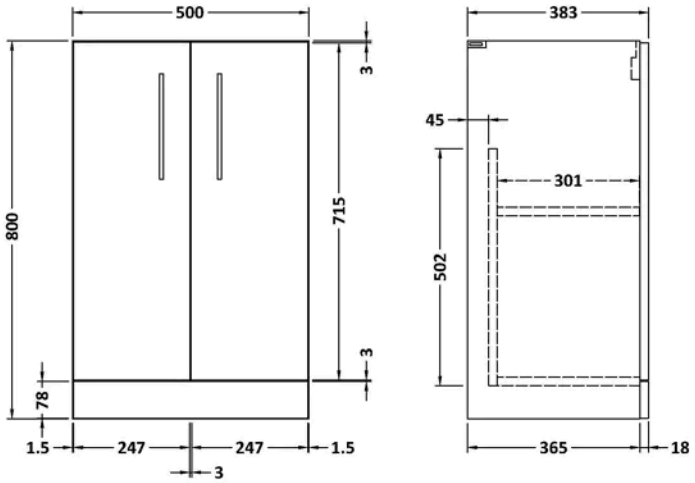

Product Dimensions

Product	800 x 500 x 383mm (H x W x D)
Packaged	835 x 520 x 375mm (H x W x D)
Nett Weight	17 kg
Packaged Weight	17.5 kg

Packaging Details

Box Qty	1

Product Details

Country of Origin	China
Product Material	Mfc Textured Woodgrain
Colour/Finish	Solace Oak
Mount Type	Floor
Style	Contemporary
Construction Method	Cam & Wood Dowel
Construction Type	Rigid
Handles Included	Yes
Material Thickness	18 mm
No. Doors	2
No. Shelves	1
Number Of Shelves	1

© ROXOR Group