Sales Code: NPF2317 **Barcode:** 5056462657400 **Brand:** Hudson Reed **Description:** Hudson Reed Juno 600mm Coastal Grey Wall Hung 50/50 Mirror Cabinet



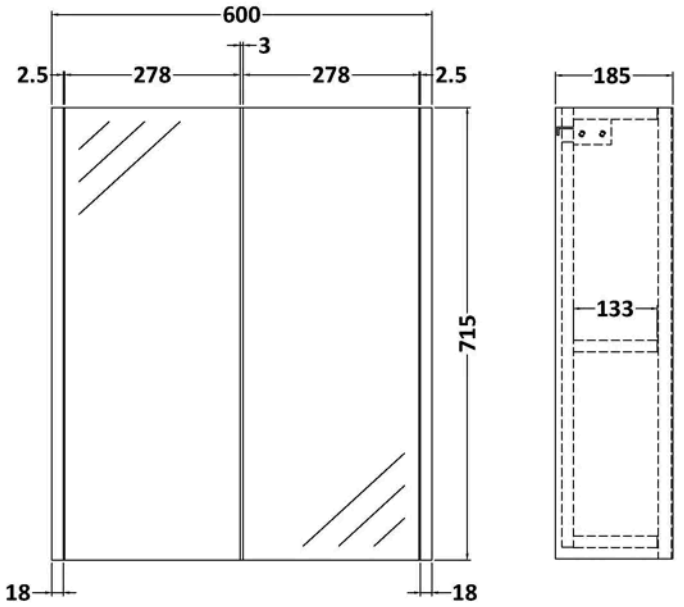

Product Dimensions

Product	715 x 600 x 185mm (H x W x D)
Packaged	735 x 620 x 202mm (H x W x D)
Nett Weight	20.5 kg
Packaged Weight	21 kg

Packaging Details

Box Qty	1

Product Details

Country of Origin	United Kingdom
Product Material	Mfc Smooth Matt
Colour/Finish	Coastal Grey
Mount Type	Wall Hung
Style	Contemporary
Handle Type	Handleless
Fixings Included	Yes
Construction Method	Cam & Wood Dowel
Ce Certified	No
Construction Type	Rigid
Fascia Finish	Mfc Smooth Matt
Fsc Certified	Yes
Handles Included	No
Leg Set Included	No
Material Thickness	18 mm
No. Doors	2
No. Shelves	1
Number Of Shelves	1

© ROXOR Group