Sales Code: NFF2741 **Barcode:** 5056678482667 **Brand:** nuie **Description:** nuie Lille Antique Oak 600mm Floor Standing WC Unit



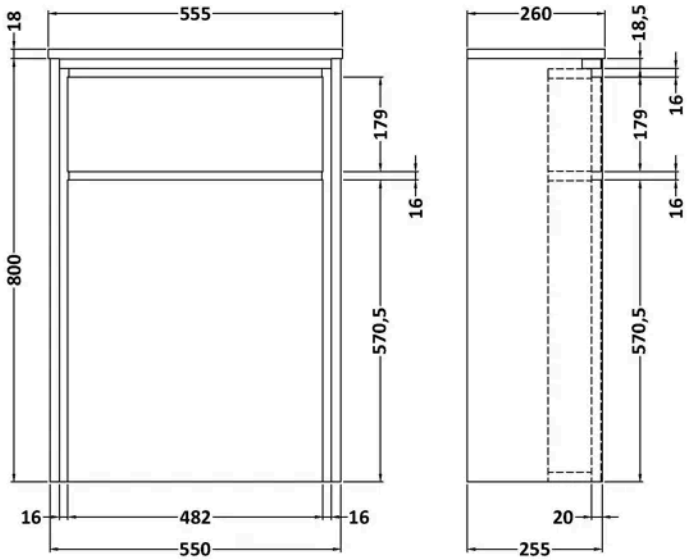

Product Dimensions

Product	818 x 550 x 255mm (H x W x D)
Packaged	858 x 582 x 280mm (H x W x D)
Nett Weight	18.5 kg
Packaged Weight	19 kg

Packaging Details

Box Qty	1
Label Colour	White
Label Qty	2.0000

Product Details

Country of Origin	China
Product Material	Mfc Textured Woodgrain
Colour/Finish	Antique Oak
Mount Type	Floor
Style	Contemporary
Fixings Included	Yes
Construction Method	Cam & Wood Dowel
Construction Type	Rigid
Fascia Finish	Mfc Textured Woodgrain
Fsc Certified	Yes
Material Thickness	18 mm

© ROXOR Group