Sales Code: NFB159 **Barcode:** 5056678467695 **Brand:** nuie Choice **Description:** nuie choice Pendulum 1800mm Freestanding Bath With Legs And Waste



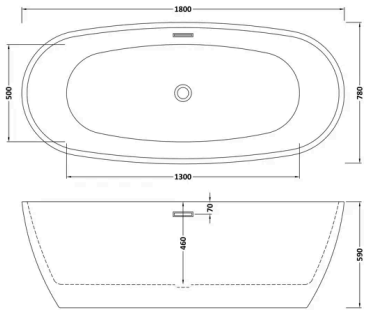

Product Dimensions

Product	590 x 780 x 1800mm (H x W x L)
Packaged	590 x 850 x 1800mm (H x W x D)
Nett Weight	50 kg
Packaged Weight	60 kg

Packaging Details

Box Qty	1

Product Details

Volume	175 Litre
Country of Origin	China
Product Material	Acrylic
Colour/Finish	White
Style	Contemporary
Bath Panel Included	No
Ce Certified	Yes
Displaced Capacity	100 Litre
Hydrotherapy System	No
Includes Grips	No
Leg Set Included	No
No. Of Tapholes	No Tapholes
Overflow Included	Yes
Tap Included	No
Waste Included	Yes

© ROXOR Group