Sales Code: NFB152 **Barcode:** 5056678449967 **Brand:** nuie Choice **Description:** nuie choice Nocturnal 1700mm Freestanding Bath With Legs And Waste



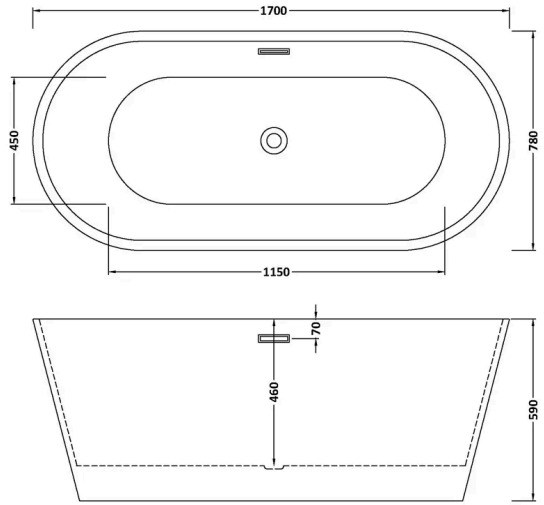

Product Dimensions

Product	590 x 780 x 1700mm (H x W x L)
Packaged	650 x 820 x 1740mm (H x W x D)
Nett Weight	50 kg
Packaged Weight	60 kg

Packaging Details

Box Qty	1

Product Details

Volume	175 Litre
Country of Origin	China
Product Material	Acrylic
Colour/Finish	White
Style	Contemporary
Fixings Included	No
Bath Panel Included	No
Ce Certified	Yes
Declaration Of Performance	No
Displaced Capacity	105 Litre
Includes Grips	No
Leg Set Included	Yes
No. Of Tapholes	No Tapholes
Overflow Included	Yes
Tap Included	No
Ukca Certified	Yes
Waste Included	Yes

© ROXOR Group