Sales Code: NFB110 **Barcode:** 5056678446737 **Brand:** nuie Choice **Description:** nuie choice Continuum 1655mm Freestanding Boat Bath With Legs

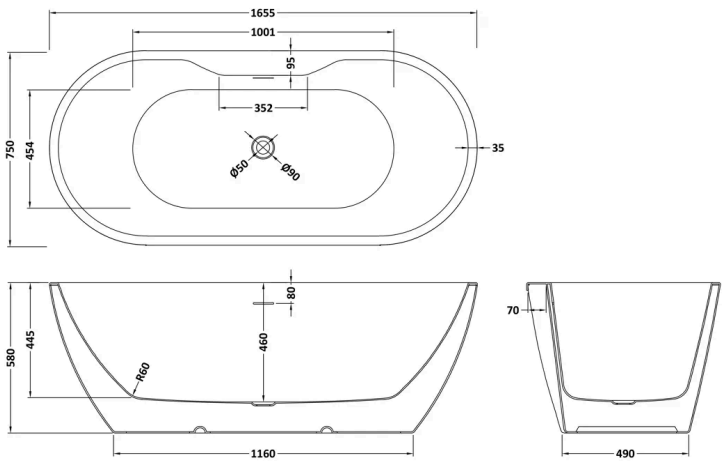

Product Dimensions

Product	580 x 750 x 1655mm (H x W x L)
Packaged	620 x 780 x 1685mm (H x W x D)
Nett Weight	46 kg
Packaged Weight	46 kg

Packaging Details

Box Qty	1
Label Size (mm)	50 x 100
Label Colour	White
Label Qty	1.0000

Product Details

Volume	236 Litre
Country of Origin	China
Product Material	Acrylic
Colour/Finish	White
Style	Contemporary
Fixings Included	No
Bath Panel Included	No
Ce Certified	Yes
Declaration Of Performance	No
Displaced Capacity	166 Litre
Hydrotherapy System	No
Includes Grips	No
Leg Set Included	Yes
No. Of Tapholes	No Tapholes
Overflow Included	Yes
Tap Included	No
Ukca Certified	No
Waste Included	Yes

© ROXOR Group