Sales Code: NFB105R **Barcode:** 5056678446706 **Brand:** nuie Choice **Description:** nuie choice Chronicle 1700mm Right-Hand Corner Bath



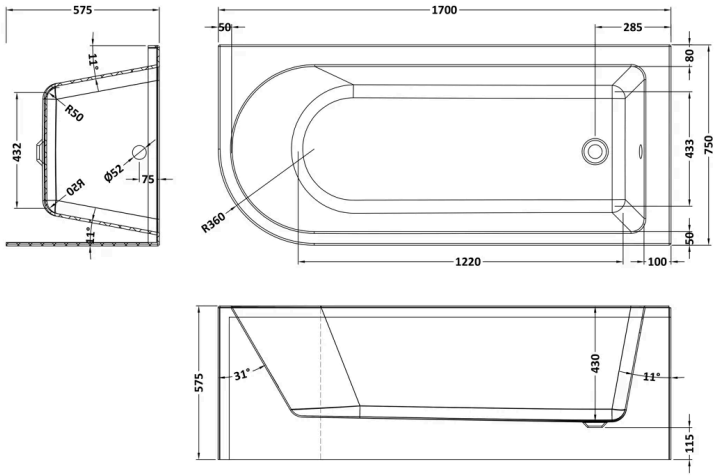

Product Dimensions

Product	575 x 750 x 1700mm (H x W x L)
Packaged	575 x 800 x 1700mm (H x W x D)
Nett Weight	46 kg
Packaged Weight	46 kg

Packaging Details

Label Size (mm)	50 x 100
Label Colour	White
Label Qty	1.0000

Product Details

Volume	240 Litre
Country of Origin	Egypt
Product Material	Acrylic
Colour/Finish	White
Style	Contemporary
Fixings Included	No
Bath Panel Included	No
Ce Certified	Yes
Declaration Of Performance	No
Displaced Capacity	170 Litre
Includes Grips	No
Leg Set Included	Yes
No. Of Tapholes	No Tapholes
Overflow Included	Yes
Tap Included	No
Ukca Certified	No
Waste Included	No

© ROXOR Group