Sales Code: NFB104 **Barcode:** 5056678446652 **Brand:** nuie Choice **Description:** nuie choice Slipper 1550mm Freestanding Bath With Legs And Waste



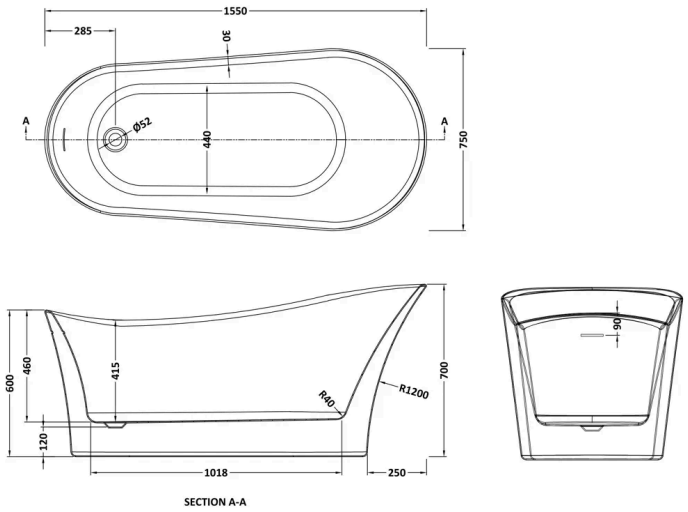

Product Dimensions

Product	700 x 750 x 1550mm (H x W x L)
Packaged	700 x 750 x 1550mm (H x W x D)
Nett Weight	37 kg
Packaged Weight	37 kg

Packaging Details

Label Size (mm)	50 x 100
Label Colour	White
Label Qty	1.0000

Product Details

Volume	193 Litre
Country of Origin	Egypt
Product Material	Acrylic
Colour/Finish	White
Style	Contemporary
Fixings Included	No
Bath Panel Included	No
Ce Certified	Yes
Declaration Of Performance	No
Displaced Capacity	123 Litre
Includes Grips	No
Leg Set Included	Yes
No. Of Tapholes	No Tapholes
Overflow Included	No
Tap Included	No
Ukca Certified	No
Waste Included	Yes

© ROXOR Group