Sales Code: NFB101 **Barcode:** 5056678446621 **Brand:** nuie Choice **Description:** nuie choice 1600mm Freestanding Bath With Legs And Waste



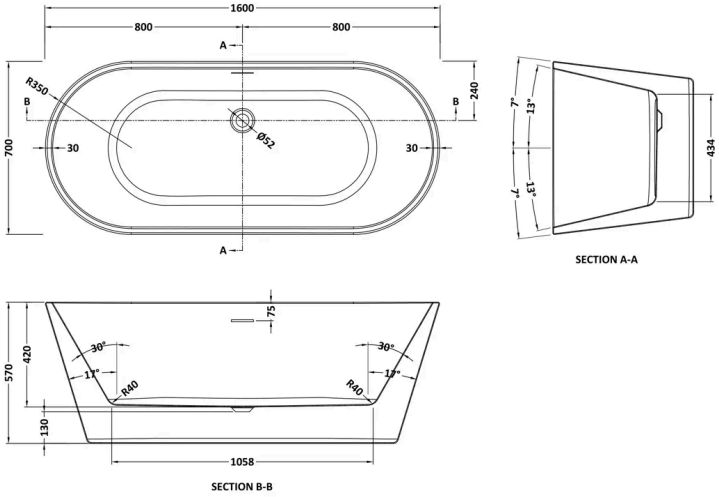

Product Dimensions

Product	570 x 700 x 1600mm (H x W x L)
Packaged	570 x 700 x 1600mm (H x W x D)
Nett Weight	35 kg
Packaged Weight	35 kg

Packaging Details

Label Size (mm)	50 x 100
Label Colour	White
Label Qty	1.0000

Product Details

Volume	210 Litre
Country of Origin	Egypt
Product Material	Acrylic
Colour/Finish	White
Style	Contemporary
Fixings Included	No
Bath Panel Included	No
Ce Certified	Yes
Declaration Of Performance	No
Displaced Capacity	140 Litre
Includes Grips	No
Leg Set Included	Yes
No. Of Tapholes	No Tapholes
Overflow Included	Yes
Tap Included	No
Ukca Certified	No
Waste Included	Yes

© ROXOR Group