Sales Code: NCU807 **Barcode:** 5055369031023 **Brand:** nuie **Description:** nuie Ambrose White Contemporary Semi Pedestal



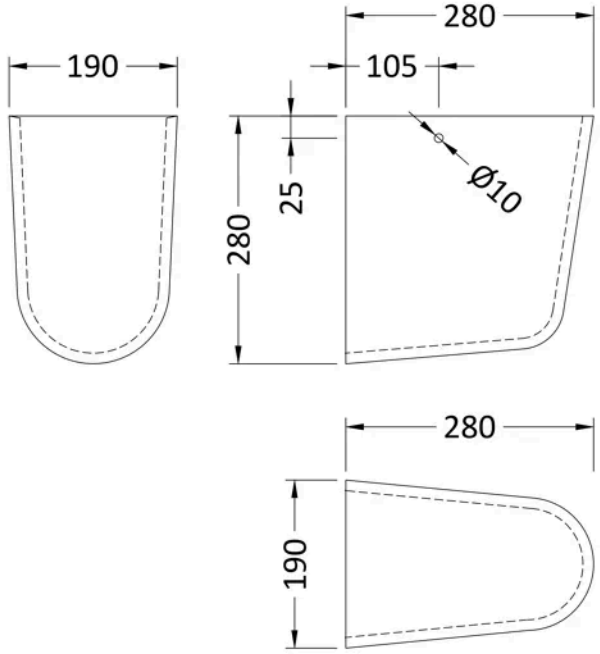

Product Dimensions

Product	280 x 190 x 280mm (H x W x D)
Packaged	300 x 210 x 295mm (H x W x D)
Nett Weight	6.4 kg
Packaged Weight	6.6 kg

Packaging Details

Box Qty	1

Product Details

Country of Origin	Turkey
Product Material	Vitreous China
Colour/Finish	White
Ce Certified	Yes

© ROXOR Group