Sales Code: NCU700 **Barcode:** 5055369030972 **Brand:** Hudson Reed **Description:** Hudson Reed Arlo Back to Wall Toilet Pan



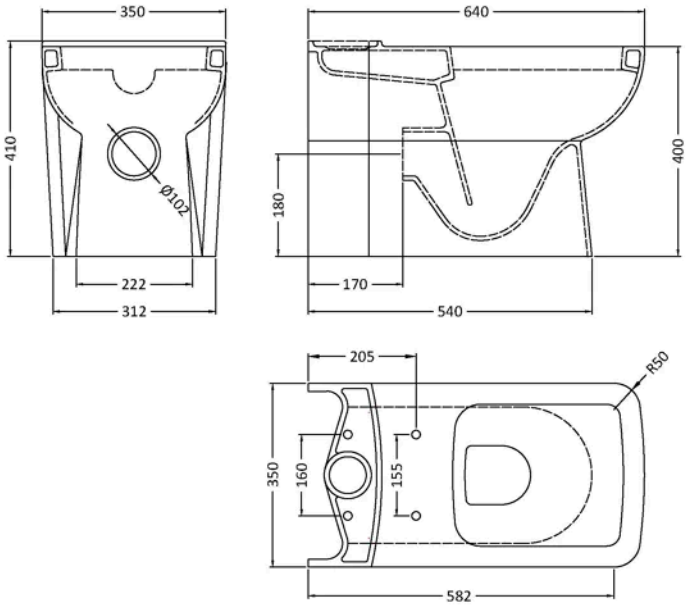

Product Dimensions

Packaged	430 x 370 x 710mm (H x W x D)
Nett Weight	27 kg
Packaged Weight	29.2 kg

Packaging Details

Box Qty	1

Product Details

Country of Origin	Turkey
Colour/Finish	White
Ce Certified	Yes

© ROXOR Group