Sales Code: NCU507 **Barcode:** 5055369030835 **Brand:** nuie **Description:** Hudson Reed Arlo White Contemporary Semi Pedestal



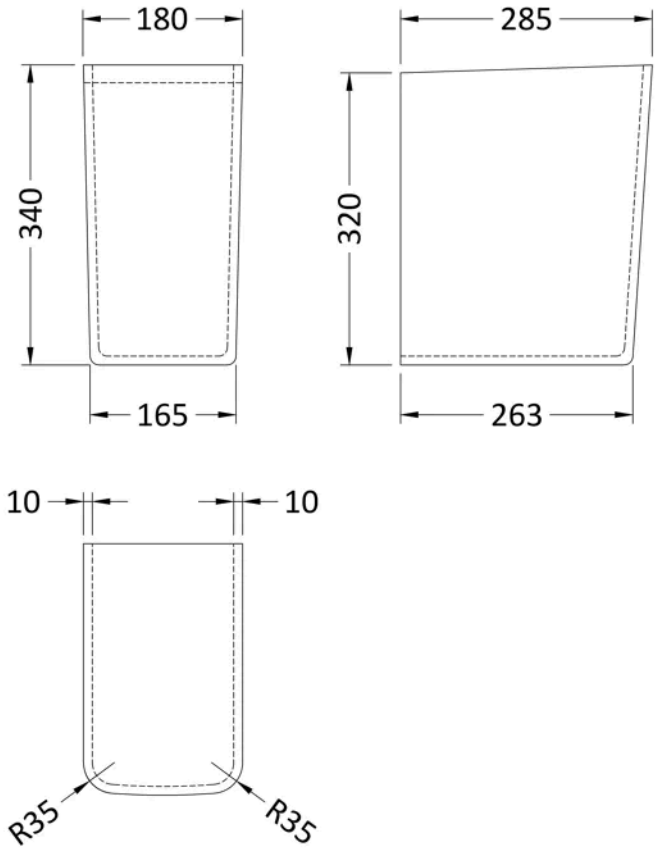

Product Dimensions

Packaged	335 x 320 x 222mm (H x W x D)
Nett Weight	7 kg
Packaged Weight	7 kg

Packaging Details

Box Qty	1

Product Details

Country of Origin	Turkey
Colour/Finish	White
Ce Certified	Yes

© ROXOR Group