Sales Code: NCT342 **Barcode:** 5055369063284 **Brand:** Hudson Reed **Description:** Hudson Reed Maya 1 Tap Hole 850mm Ceramic Basin



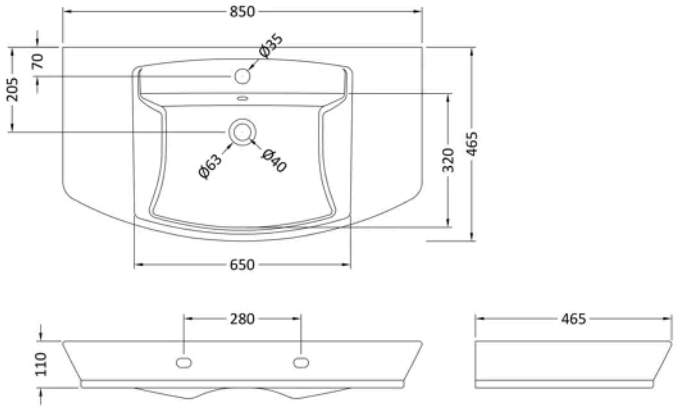

Product Dimensions

Product	110 x 850 x 465mm (H x W x D)
Packaged	910 x 190 x 510mm (H x W x D)
Nett Weight	23.3 kg
Packaged Weight	23.3 kg

Packaging Details

Box Qty	1

Product Details

Country of Origin	Turkey
Product Material	Vitreous China
Colour/Finish	White
Ce Certified	Yes
Inner Bowl Height	100 mm
No. Of Tapholes	1
Number Of Bowls	1

© ROXOR Group