Sales Code: NCT300C **Barcode:** 5055369063338 **Brand:** Hudson Reed **Description:** Hudson Reed Maya Wall Hung Pan



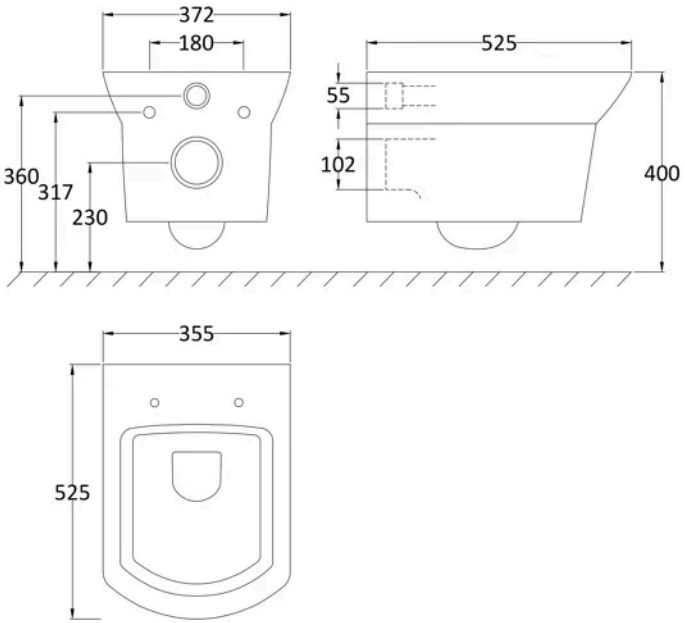

Product Dimensions

Packaged	410 x 370 x 550mm (H x W x D)
Nett Weight	23.7 kg
Packaged Weight	23.7 kg

Packaging Details

Box Qty	1

Product Details

Country of Origin	Turkey
Colour/Finish	White
Fixings Included	No
Ce Certified	Yes

© ROXOR Group