Sales Code: NCT300 **Barcode:** 5055369063314 **Brand:** Hudson Reed **Description:** Hudson Reed Maya Close Coupled Pan



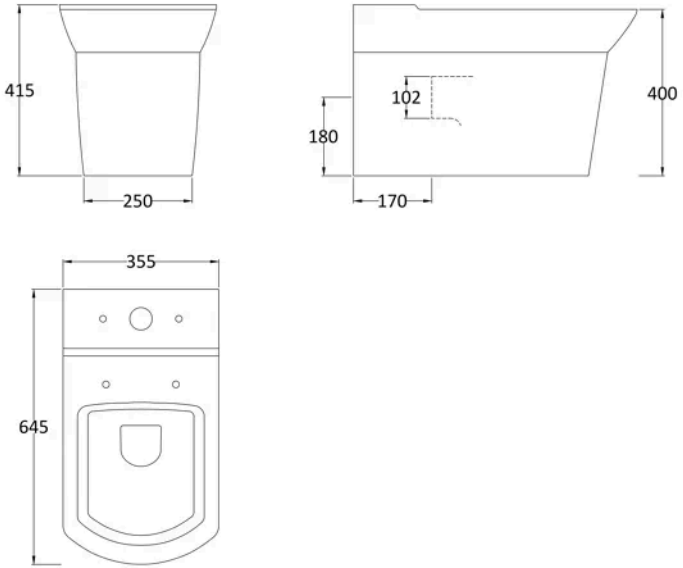

Product Dimensions

Packaged	430 x 380 x 700mm (H x W x D)
Nett Weight	35.2 kg
Packaged Weight	35.2 kg

Packaging Details

Box Qty	1

Product Details

Country of Origin	Turkey
Colour/Finish	White
Ce Certified	Yes

© ROXOR Group