Sales Code: NCS882B **Barcode:** 5055275895542 **Brand:** Old London **Description:** Hudson Reed Richmond 3 Tap Hole 595mm Ceramic Basin



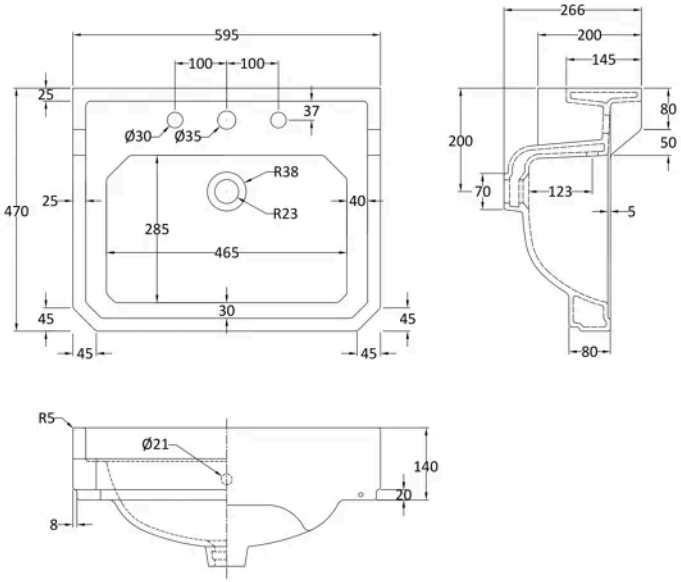

Product Dimensions

Product	266 x 595 x 470mm (H x W x D)
Packaged	287 x 615 x 490mm (H x W x D)
Nett Weight	20.5 kg
Packaged Weight	22.1 kg

Packaging Details

Box Qty	1

Product Details

Country of Origin	China
Product Material	Vitreous China
Colour/Finish	White
Style	Contemporary
Ce Certified	Yes
Inner Bowl Height	112 mm
No. Of Tapholes	3
Number Of Bowls	1
Overflow Included	Yes
Tap Included	No
Waste Included	No

© ROXOR Group