Sales Code: NCS880 **Barcode:** 5055369040100 **Brand:** nuie **Description:** Old London Richmond Traditional Close Coupled Pan



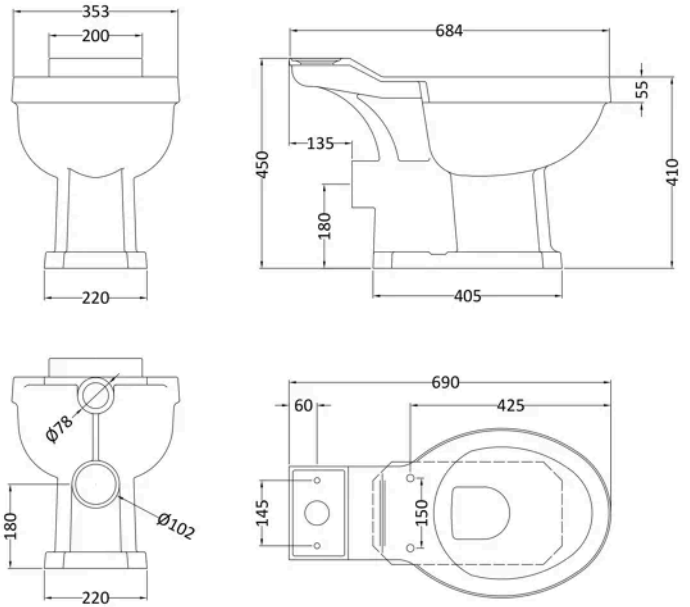

Product Dimensions

Product	450 x 353 x 690mm (H x W x D)
Packaged	335 x 700 x 450mm (H x W x D)
Nett Weight	20.42 kg
Packaged Weight	21.5 kg

Packaging Details

Box Qty	1

Product Details

Country of Origin	China
Product Material	Vitreous China
Colour/Finish	White
Style	Traditional
Ce Certified	Yes
Includes Seat	No
Pan Type	Open To Wall

© ROXOR Group