Sales Code: NCS870 **Barcode:** 5055369040131 **Brand:** Old London **Description:** Richmond Traditional Pan



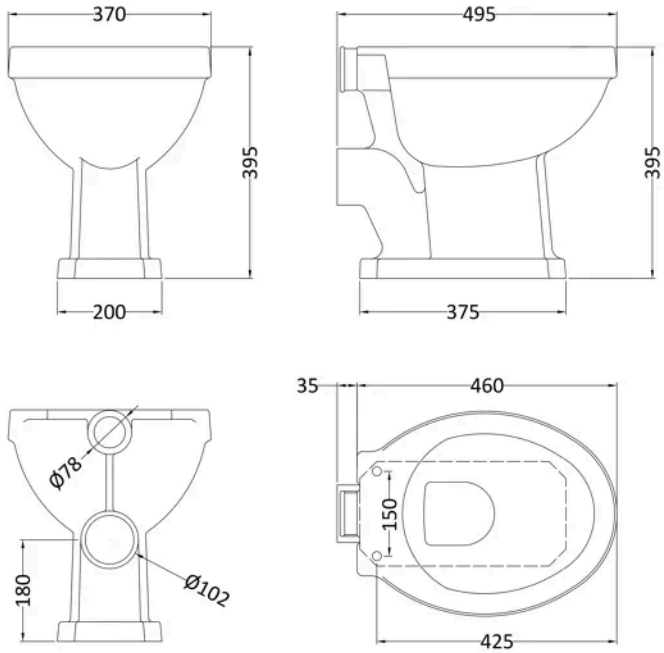

Product Dimensions

Product	395 x 370 x 495mm (H x W x D)
Packaged	425 x 525 x 430mm (H x W x D)
Nett Weight	15.61 kg
Packaged Weight	16.5 kg

Packaging Details

Box Qty	1

Product Details

Country of Origin	China
Product Material	Vitreous China
Colour/Finish	White
Style	Traditional
Ce Certified	Yes
Includes Seat	No
Pan Type	Open To Wall

© ROXOR Group