**Sales Code:** NCS860 **Barcode:** 5055275895573 **Brand:** Old London **Description:** Old London Richmond Traditional Comfort Height Close Coupled Pan



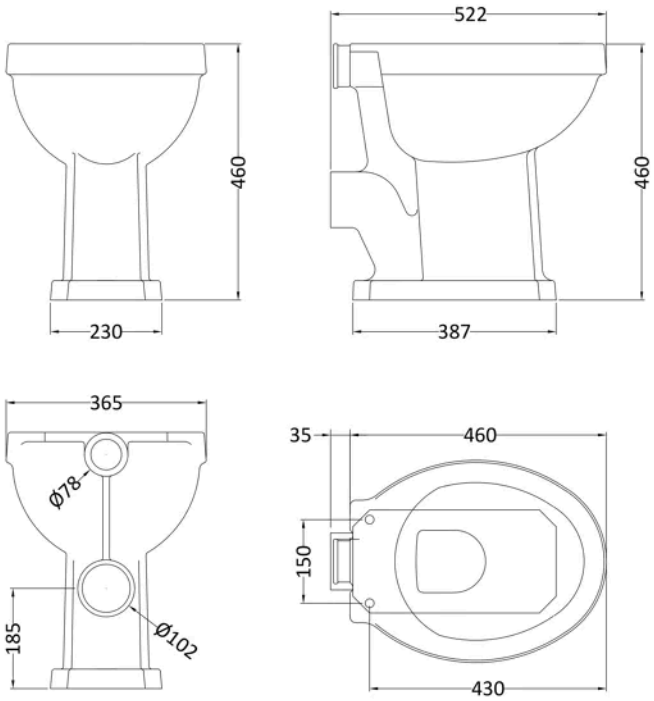


## Product Dimensions

| | |
|---|---|
| Packaged | 500 x 380 x 515mm (H x W x D) |
| Nett Weight | 19 kg |
| Packaged Weight | 19.6 kg |

## Packaging Details

| | |
|---|---|
| Box Qty | 1 |

## Product Details

| | |
|---|---|
| Country of Origin | China |
| Colour/Finish | White |
| Ce Certified | Yes |

© ROXOR Group