Sales Code: NCS850 **Barcode:** 5055275895566 **Brand:** Old London **Description:** Old London Richmond Traditional Comfort Height Pan



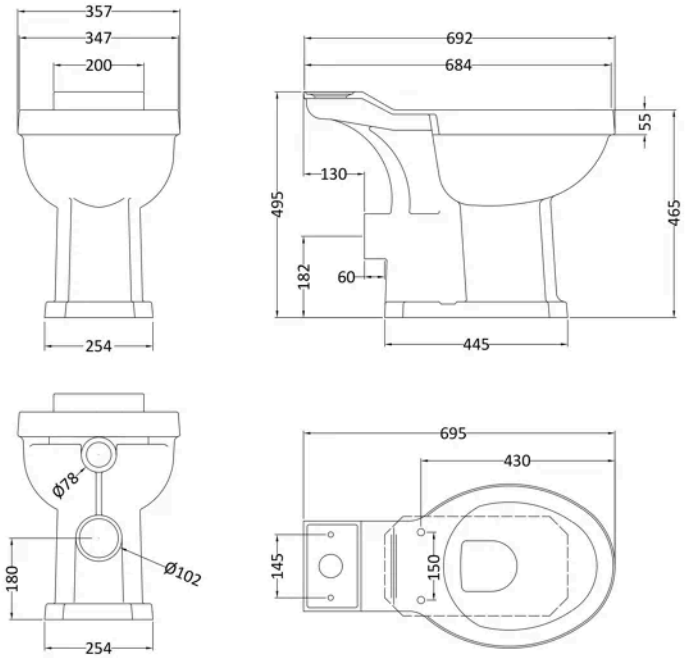

Product Dimensions

Packaged	380 x 720 x 505mm (H x W x D)
Nett Weight	22.5 kg
Packaged Weight	23.1 kg

Packaging Details

Box Qty	1

Product Details

Country of Origin	China
Colour/Finish	White
Ce Certified	Yes

© ROXOR Group