Sales Code: NCS403 **Barcode:** 5055369026579 **Brand:** nuie **Description:** nuie Legend Traditional Full Pedestal



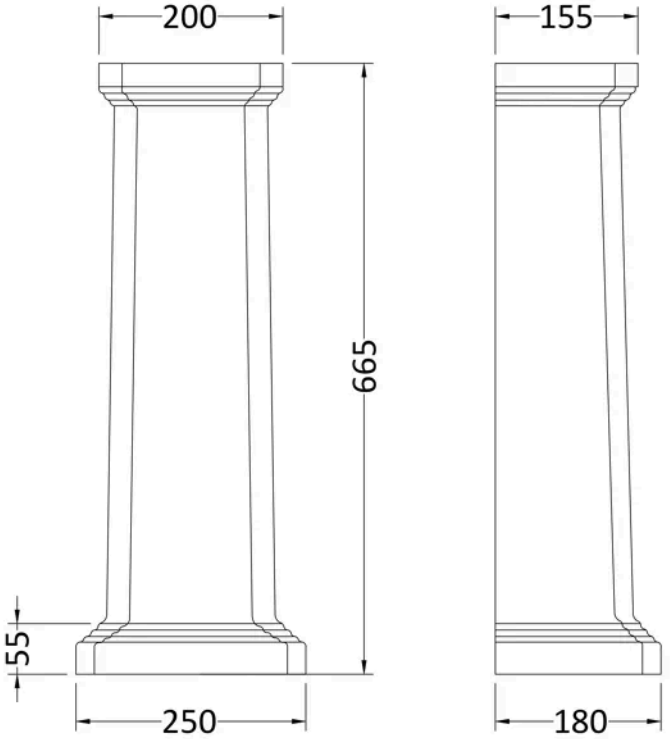

Product Dimensions

Product	690 x 260 x 160mm (H x W x D)
Packaged	700 x 270 x 200mm (H x W x D)
Nett Weight	10.56 kg
Packaged Weight	11 kg

Packaging Details

Box Qty	1

Product Details

Country of Origin	China
Product Material	Vitreous China
Colour/Finish	White
Ce Certified	Yes

© ROXOR Group