Sales Code: NCK200B **Barcode:** 5056678441350 **Brand:** nuie **Description:** nuie Isla Rimless Close Coupled Toilet Pan



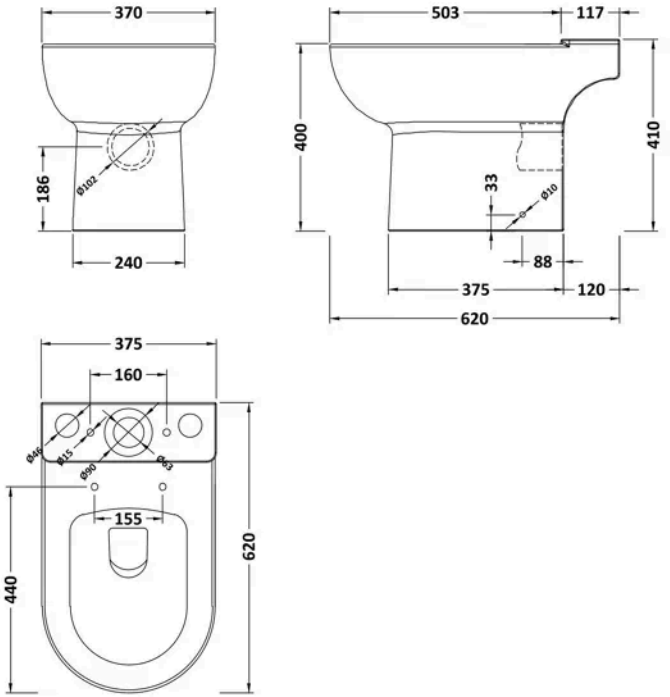

Product Dimensions

Packaged	700 x 440 x 440mm (H x W x D)
Nett Weight	26.7 kg
Packaged Weight	26.7 kg

Packaging Details

Box Qty	1

Product Details

Country of Origin	China
Colour/Finish	White
Style	Contemporary
Ce Certified	Yes
Pan Trap Style	P-Trap
Pan Type	Open To Wall

© ROXOR Group