Sales Code: NCH407 **Barcode:** 5055369043309 **Brand:** nuie **Description:** nuie Provost White Contemporary Semi Pedestal



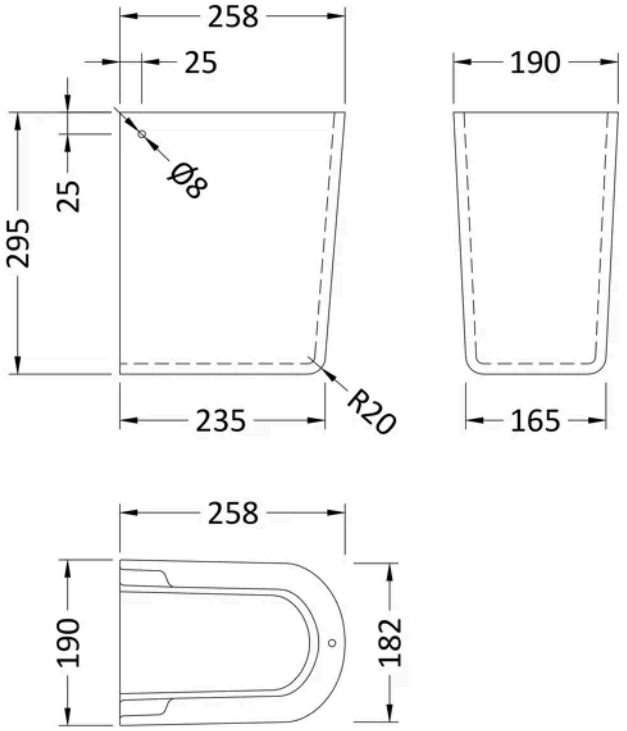

Product Dimensions

Product	295 x 190 x 258mm (H x W x D)
Packaged	330 x 230 x 300mm (H x W x D)
Nett Weight	7.3 kg
Packaged Weight	7.5 kg

Packaging Details

Box Qty	1

Product Details

Country of Origin	China
Product Material	Vitreous China
Colour/Finish	White
Style	Contemporary
Ce Certified	Yes

© ROXOR Group