Sales Code: NCA621 **Barcode:** 5055369069286 **Brand:** nuie **Description:** nuie Lawton New Cistern



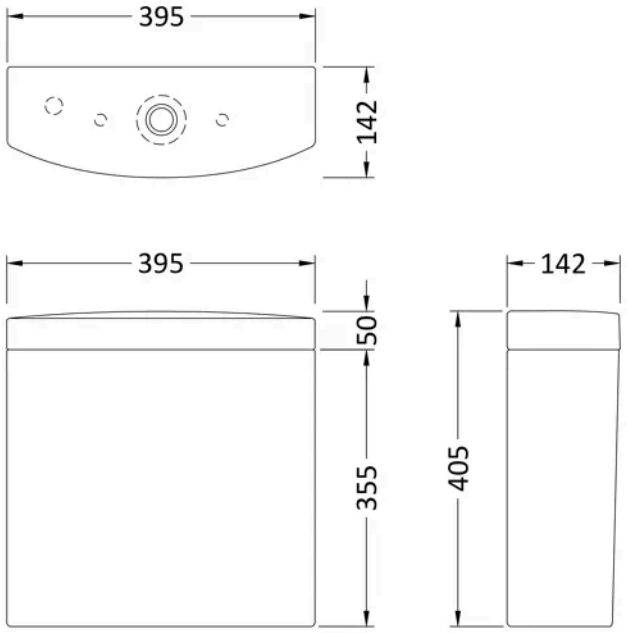

Product Dimensions

Product	405 x 395 x 142mm (H x W x D)
Packaged	440 x 410 x 150mm (H x W x D)
Nett Weight	13.8 kg
Packaged Weight	14 kg

Packaging Details

Box Qty	1

Product Details

Country of Origin	China
Product Material	Vitreous China
Colour/Finish	White
Ce Certified	Yes

© ROXOR Group