Sales Code: NCA370 **Barcode:** 5055369026272 **Brand:** nuie **Description:** nuie Provost Short Projection Toilet Pan



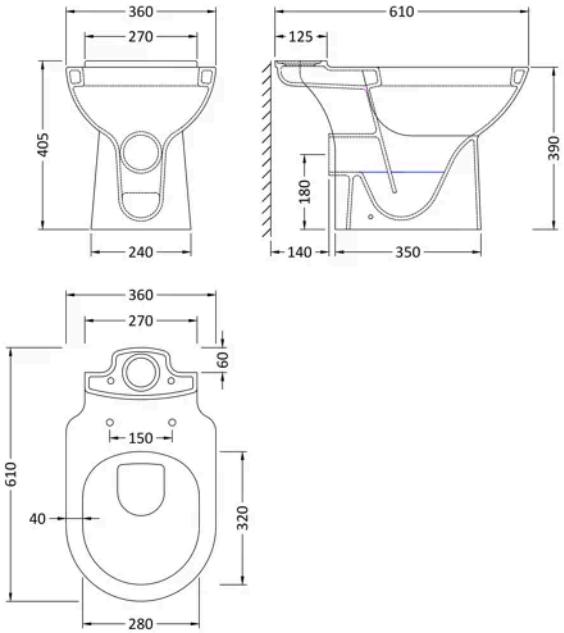

Product Dimensions

Product	405 x 360 x 610mm (H x W x D)
Packaged	420 x 390 x 630mm (H x W x D)
Nett Weight	20.2 kg
Packaged Weight	20.7 kg

Packaging Details

Box Qty	1

Product Details

Product Material	Vitreous China
Colour/Finish	White
Ce Certified	Yes

© ROXOR Group