Sales Code: NCA203 **Barcode:** 5055369026210 **Brand:** nuie **Description:** nuie Asselby White Contemporary Full Pedestal



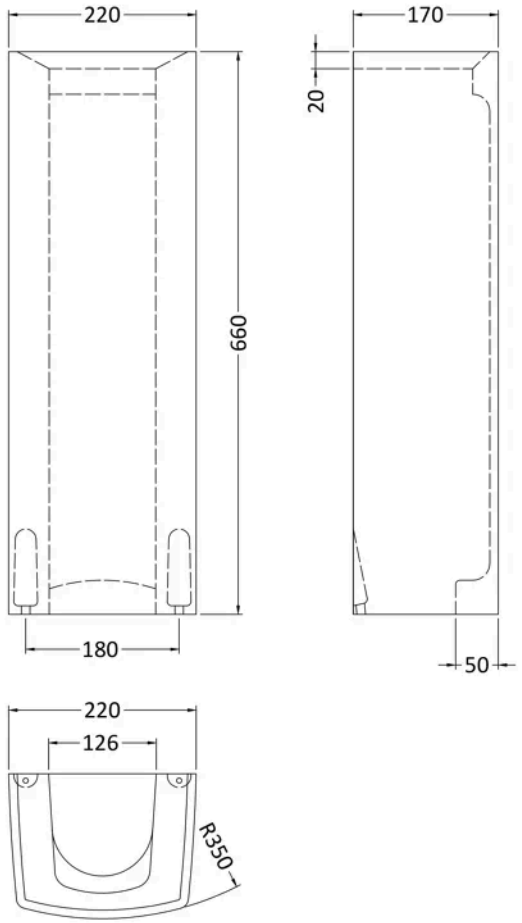

Product Dimensions

Product	660 x 220 x 170mm (H x W x D)
Packaged	175 x 670 x 225mm (H x W x D)
Nett Weight	12.4 kg
Packaged Weight	12.6 kg

Packaging Details

Box Qty	1

Product Details

Country of Origin	China
Product Material	Vitreous China
Colour/Finish	White
Mount Type	Floor
Style	Contemporary
Ce Certified	Yes

© ROXOR Group