Sales Code: NCA122 **Barcode:** 5055369026173 **Brand:** Old London **Description:** Old London Chancery 2 Tap Hole 600mm Ceramic Basin



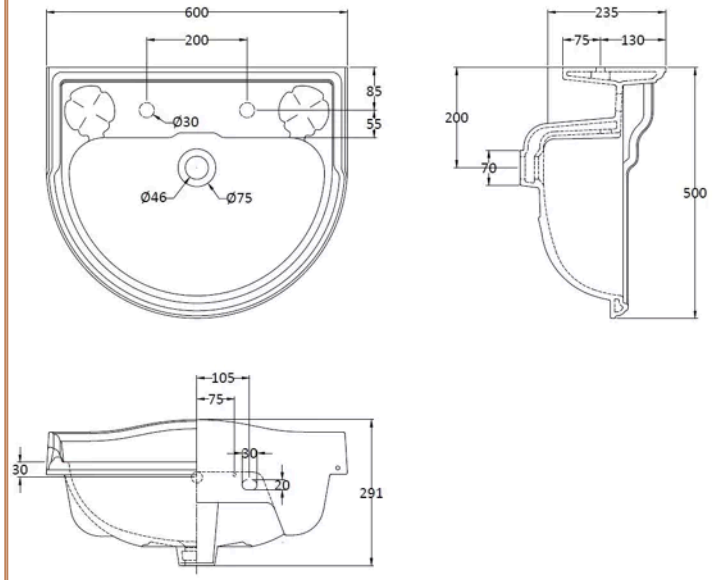

Product Dimensions

Packaged	310 x 620 x 460mm (H x W x D)
Nett Weight	18.2 kg
Packaged Weight	18.8 kg

Packaging Details

Box Qty	1

Product Details

Country of Origin	China
Product Material	Vitreous China
Colour/Finish	White
Ce Certified	Yes
Inner Bowl Height	175 mm
No. Of Tapholes	2
Number Of Bowls	1

© ROXOR Group