Sales Code: NBC101 **Barcode:** 5055369054176 **Brand:** nuie **Description:** nuie Mayford Square 1 Tap Hole 460mm Ceramic Basin



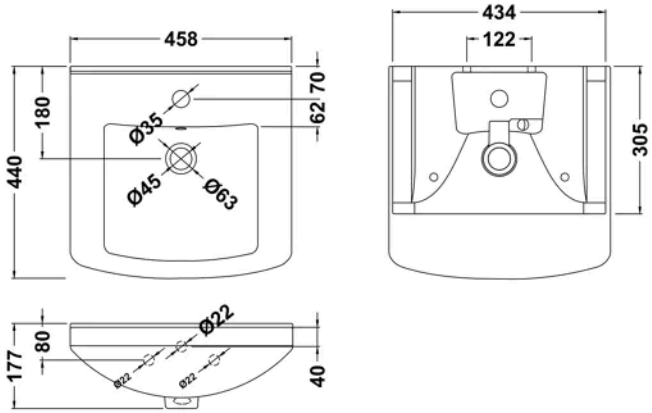

Product Dimensions

Product	177 x 458 x 440mm (H x W x D)
Packaged	460 x 190 x 475mm (H x W x D)
Nett Weight	11.5 kg
Packaged Weight	11.5 kg

Packaging Details

Box Qty	1

Product Details

Country of Origin	China
Product Material	Vitreous China
Colour/Finish	White
Ce Certified	Yes
Inner Bowl Height	110 mm
No. Of Tapholes	1
Number Of Bowls	1

© ROXOR Group