Sales Code: NBC004 **Barcode:** 5055146172901 **Brand:** nuie **Description:** nuie Mayford Round 1 Tap Hole 750mm Ceramic Basin



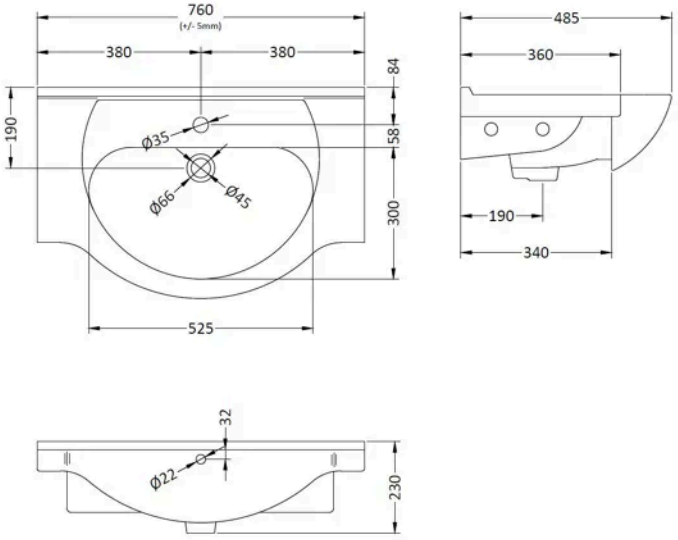

Product Dimensions

Product	230 x 760 x 485mm (H x W x D)
Packaged	535 x 780 x 240mm (H x W x D)
Nett Weight	20.8 kg
Packaged Weight	21.43 kg

Packaging Details

Box Qty	1

Product Details

Country of Origin	China
Product Material	Vitreous China
Colour/Finish	White
Ce Certified	Yes
Inner Bowl Height	150 mm
No. Of Tapholes	1
Number Of Bowls	1

© ROXOR Group