Sales Code: NBC003 **Barcode:** 5055146172871 **Brand:** nuie **Description:** nuie Mayford Round 1 Tap Hole 650mm Ceramic Basin



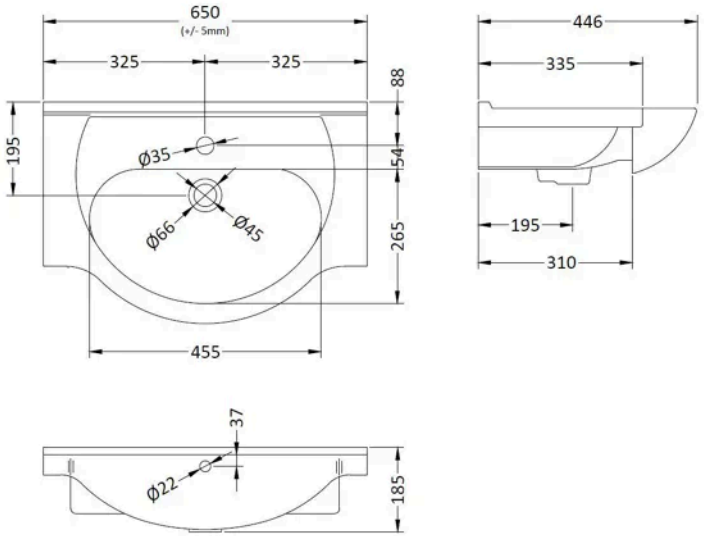

Product Dimensions

Product	185 x 650 x 446mm (H x W x D)
Packaged	470 x 670 x 200mm (H x W x D)
Nett Weight	16.5 kg
Packaged Weight	17.18 kg

Packaging Details

Box Qty	1

Product Details

Country of Origin	China
Product Material	Vitreous China
Colour/Finish	White
Ce Certified	Yes
Inner Bowl Height	115 mm
No. Of Tapholes	1
Number Of Bowls	1

© ROXOR Group