Sales Code: NBB002 **Barcode:** 5055275895870 **Brand:** Hudson Reed **Description:** Hudson Reed Rose 1510mm Freestanding Bath With Waste



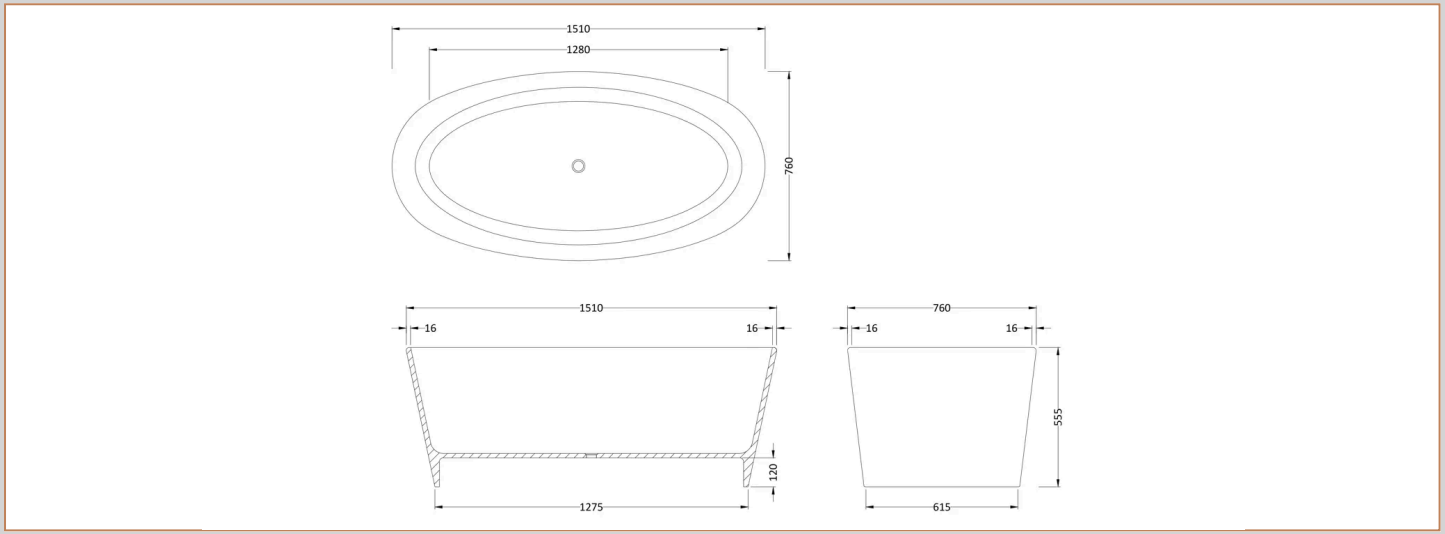

Product Dimensions

Product	555 x 760 x 1510mm (H x W x L)
Packaged	585 x 800 x 1550mm (H x W x D)
Nett Weight	73 kg
Packaged Weight	73 kg

Packaging Details

Label Size (mm)	50 x 100
Label Colour	White
Label Qty	1.0000

Product Details

Volume	160 Litre
Country of Origin	South Africa
Product Material	Cian Solid Surface
Colour/Finish	White
Style	Contemporary
Fixings Included	No
Bath Panel Included	No
Ce Certified	Yes
Declaration Of Performance	No
Displaced Capacity	90 Litre
Includes Grips	No
Leg Set Included	No
No. Of Tapholes	No Tapholes
Overflow Included	No
Tap Included	No
Ukca Certified	No
Waste Included	Yes

© ROXOR Group