Sales Code: MWP600 **Barcode:** 5056817727895 **Brand:** nuie Choice **Description:** nuie choice White 600W 3 Inlet Macerator Pump System



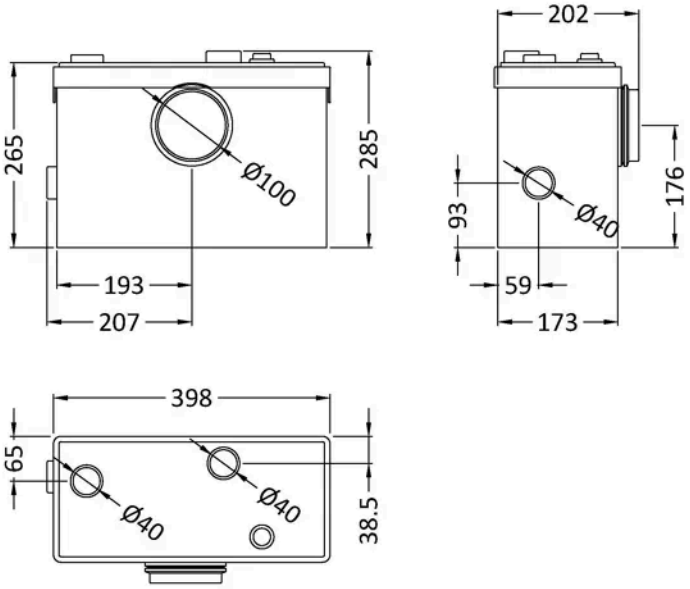

Product Dimensions

Product	285 x 398 x 202mm (H x W x D)
Packaged	240 x 300 x 400mm (H x W x D)
Nett Weight	8 kg
Packaged Weight	9 kg

Packaging Details

Box Qty	1

Product Details

Country of Origin	China
Product Material	Plastic
Colour/Finish	White
Style	Contemporary

© ROXOR Group