**Sales Code:** MWP400 **Barcode:** 5056817727901 **Brand:** nuie Choice **Description:** nuie choice White 400W 4 Inlet Macerator Pump System



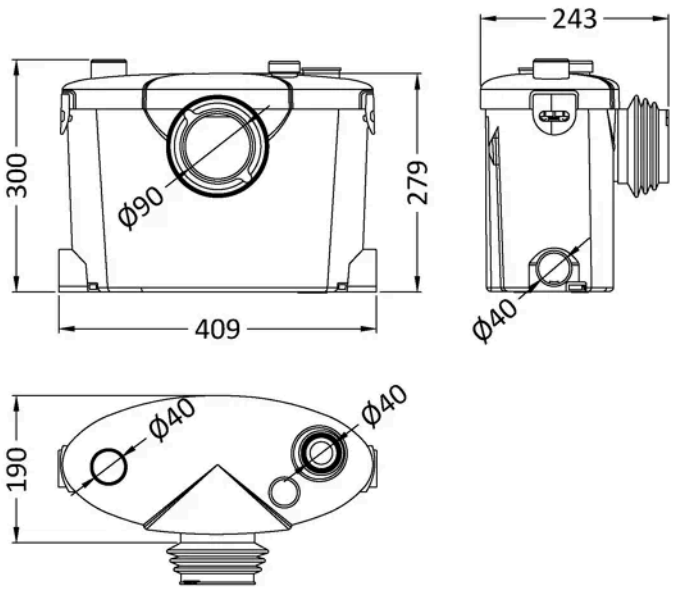


## Product Dimensions

| | |
|---|---|
| Product | 300 x 409 x 243mm (H x W x D) |
| Packaged | 240 x 300 x 400mm (H x W x D) |
| Nett Weight | 7 kg |
| Packaged Weight | 8 kg |

## Packaging Details

| | |
|---|---|
| Box Qty | 1 |
| Label Size (mm) | 50 x 100 |
| Label Colour | White |
| Label Qty | 2.0000 |

## Product Details

| | |
|---|---|
| Country of Origin | China |
| Product Material | Plastic |
| Colour/Finish | White |
| Style | Contemporary |
| Heating Element Wattage | 400 Watts |

© ROXOR Group