Sales Code: MPC3131 **Barcode:** 5056678423691 **Brand:** nuie **Description:** 680x18mm Square Green MFC Matt Shower Bath End Panel



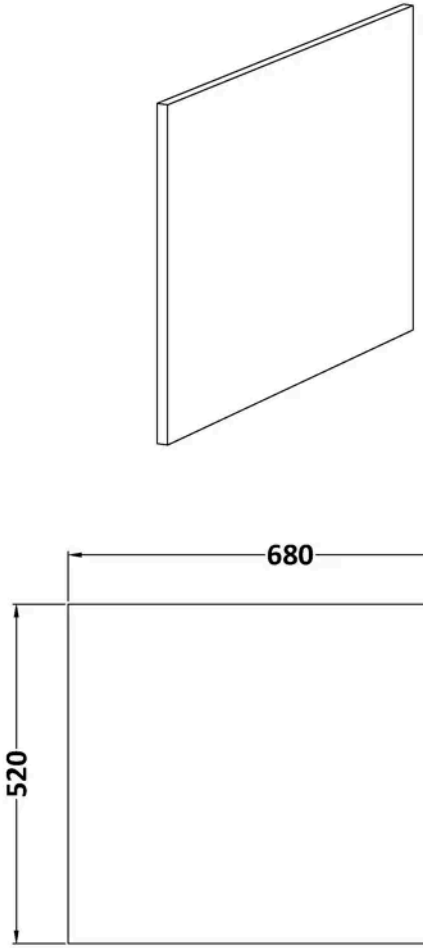

Product Dimensions

Product	520 x 680 x 18mm (H x W x D)
Packaged	30 x 540 x 700mm (H x W x D)
Nett Weight	8.5 kg
Packaged Weight	8.5 kg

Packaging Details

Box Qty	1

Product Details

Country of Origin	United Kingdom
Product Material	Mfc Smooth Matt
Colour/Finish	Fern Green
Style	Contemporary
Fixings Included	Yes
Bath Panel Shape	Square
Bath Panel Type	End Panel
Fsc Certified	Yes
Material Thickness	18 mm

© ROXOR Group