**Sales Code:** MOC382 **Barcode:** 5055275869956 **Brand:** nuie **Description:** nuie Athena 500mm Gloss Grey 1 Drawer Wall Hung Vanity Unit

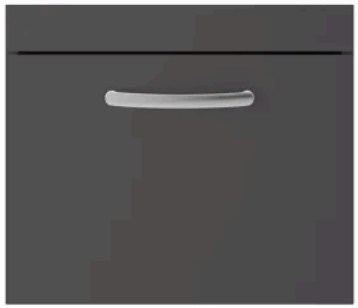

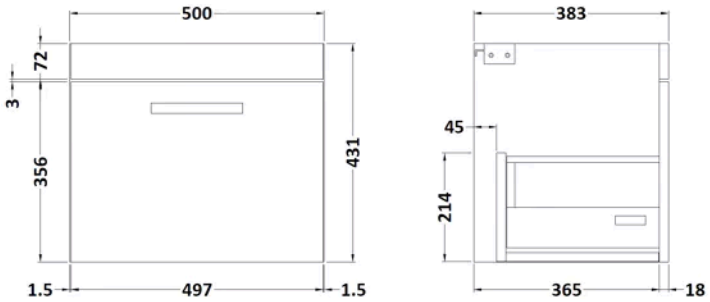


## Product Dimensions

| | |
|---|---|
| Product | 430 x 500 x 383mm (H x W x D) |
| Packaged | 450 x 520 x 405mm (H x W x D) |
| Nett Weight | 12 kg |
| Packaged Weight | 12.5 kg |

## Packaging Details

| | |
|---|---|
| Box Qty | 1 |

## Product Details

| | |
|---|---|
| Country of Origin | United Kingdom |
| Product Material | Mdf Painted Gloss |
| Colour/Finish | Gloss Grey |
| Mount Type | Wall Hung |
| Style | Contemporary |
| Construction Method | Cam & Wood Dowel |
| Construction Type | Rigid |
| Fascia Finish | Mdf Painted Gloss |
| Handles Included | Yes |
| Material Thickness | 18 mm |
| No. Drawers | 1 |
| No. Shelves | 1 |
| Number Of Shelves | 1 |

© ROXOR Group