Sales Code: MIL286 **Barcode:** 5056817746063 **Brand:** nuie Choice **Description:** nuie choice Milo Round Back to Wall Toilet Pan



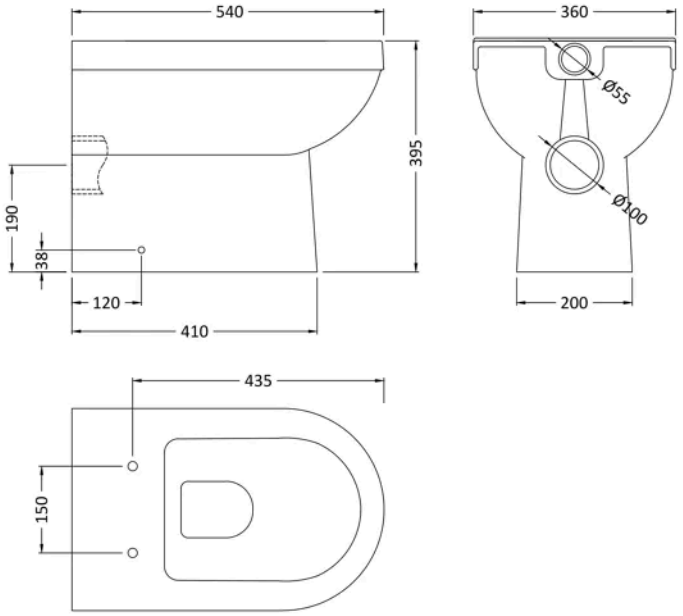

Product Dimensions

Product	395 x 360 x 540mm (H x W x D)
Packaged	450 x 375 x 560mm (H x W x D)
Nett Weight	24 kg
Packaged Weight	24.5 kg

Packaging Details

Box Qty	1

Product Details

Country of Origin	China
Product Material	Vitreous China
Colour/Finish	White
Style	Contemporary
Ce Certified	Yes
Includes Seat	No
Pan Type	Back To Wall

© ROXOR Group