Sales Code: MIL251 **Barcode:** 5056817746094 **Brand:** nuie Choice **Description:** nuie choice Milo Comfort Height Pan & Cistern



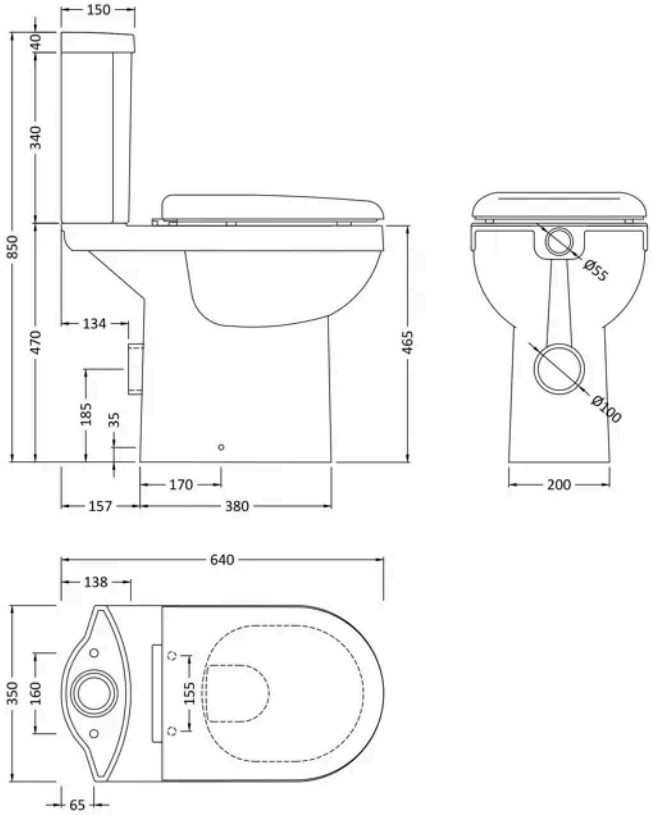

Product Dimensions

Product	850 x 350 x 640mm (H x W x D)
Nett Weight	37.5 kg
Packaged Weight	37.5 kg

Product Details

Country of Origin	China
Product Material	Vitreous China
Colour/Finish	White
Style	Contemporary
Ce Certified	Yes
Cistern Fittings	Loose 6/3L
Cistern Lever Type	Plastic Chrome Plated
Flush Operating Type	Push Button
Includes Seat	No
Pan Trap Style	P-Trap
Pan Type	Comfort Height

© ROXOR Group

Sales Code: NCS290 **Barcode:** 5055275872857 **Brand:** nuie **Description:** nuie Ivo Comfort Height Pan



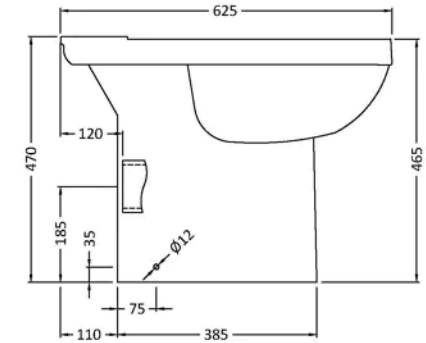

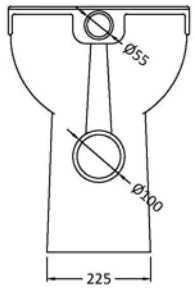

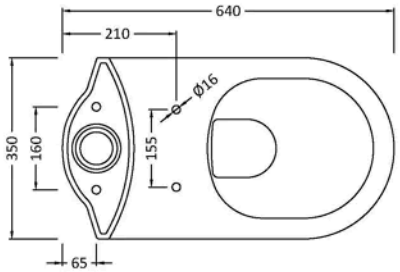

Product Dimensions

Product	470 x 350 x 640mm (H x W x D)
Packaged	495 x 390 x 650mm (H x W x D)
Nett Weight	25 kg
Packaged Weight	25.5 kg

Product Details

Product Material	Vitreous China
Colour/Finish	White
Ce Certified	Yes

© ROXOR Group

Sales Code: NCS291 **Barcode:** 5055275872864 **Brand:** nuie **Description:** nuie Ivo Close Coupled Cistern



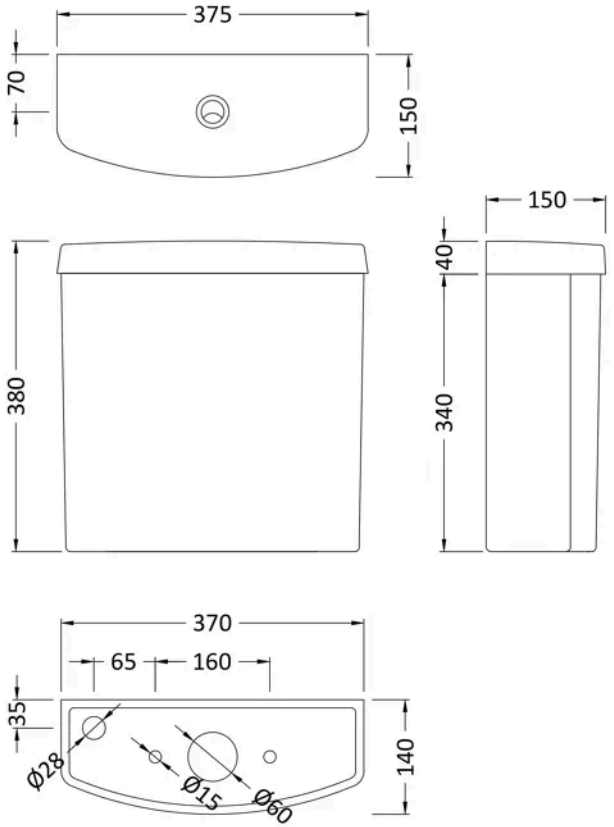

Product Dimensions

Product	380 x 375 x 150mm (H x W x D)
Packaged	400 x 385 x 160mm (H x W x D)
Nett Weight	11.8 kg
Packaged Weight	12 kg

Product Details

Product Material	Vitreous China
Colour/Finish	White
Ce Certified	Yes

© ROXOR Group