Sales Code: MIL250 **Barcode:** 5056817746087 **Brand:** nuie Choice **Description:** nuie choice Milo Rimless Close Coupled Toilet



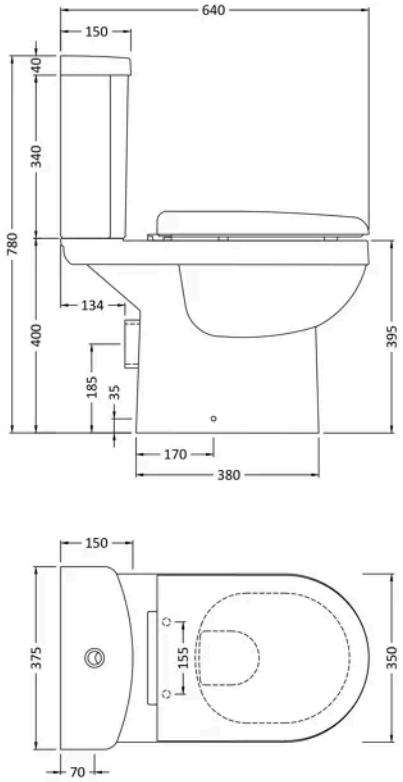

Product Dimensions

Product	780 x 375 x 640mm (H x W x D)
Packaged	445 x 390 x 725mm (H x W x D)
Nett Weight	33.35 kg
Packaged Weight	33.85 kg

Packaging Details

Box Qty	1

Product Details

Country of Origin	China
Product Material	Vitreous China
Colour/Finish	White
Style	Contemporary
Ce Certified	Yes
Cistern Fittings	Loose 6/3L
Cistern Lever Type	Plastic Chrome Plated
Flush Operating Type	Push Button
Includes Seat	Yes
Pan Trap Style	P-Trap
Pan Type	Open To Wall
Toilet Seat Function	Soft Close
Toilet Seat Hinge Material	Plastic
Toilet Seat Hinge Type	Bottom & Top Fix
Toilet Seat Type	Round

© ROXOR Group