Sales Code: MIL003 **Barcode:** 5056817746056 **Brand:** nuie Choice **Description:** nuie choice Milo 2 Tap Hole 550mm Basin & Pedestal



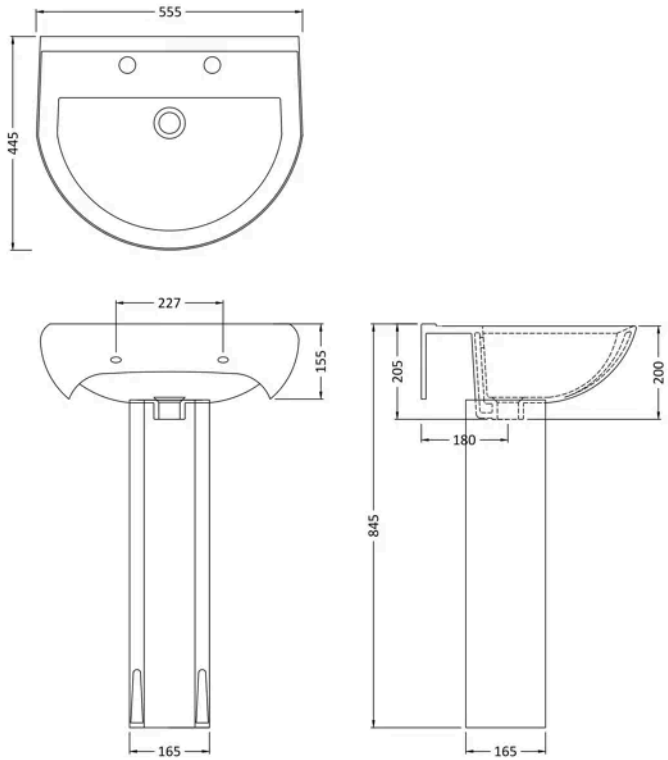

Product Dimensions

Product	845 x 555 x 445mm (H x W x D)
Packaged	550 x 550 x 550mm (H x W x D)
Nett Weight	25.06 kg
Packaged Weight	25.06 kg

Product Details

Country of Origin	China
Product Material	Vitreous China
Colour/Finish	White
Mount Type	Floor,Pedestal
Style	Contemporary
Fixings Included	No
Ce Certified	Yes
Inner Bowl Depth	260 mm
Inner Bowl Height	155 mm
Inner Bowl Width	470 mm
No. Of Tapholes	2
Number Of Bowls	1
Overflow Cover Included	No
Overflow Included	Yes
Tap Included	No
Waste Included	No

© ROXOR Group

Sales Code: NCS203 **Barcode:** 5060272820077 **Brand:** nuie **Description:** nuie Ivo White Contemporary Full Pedestal



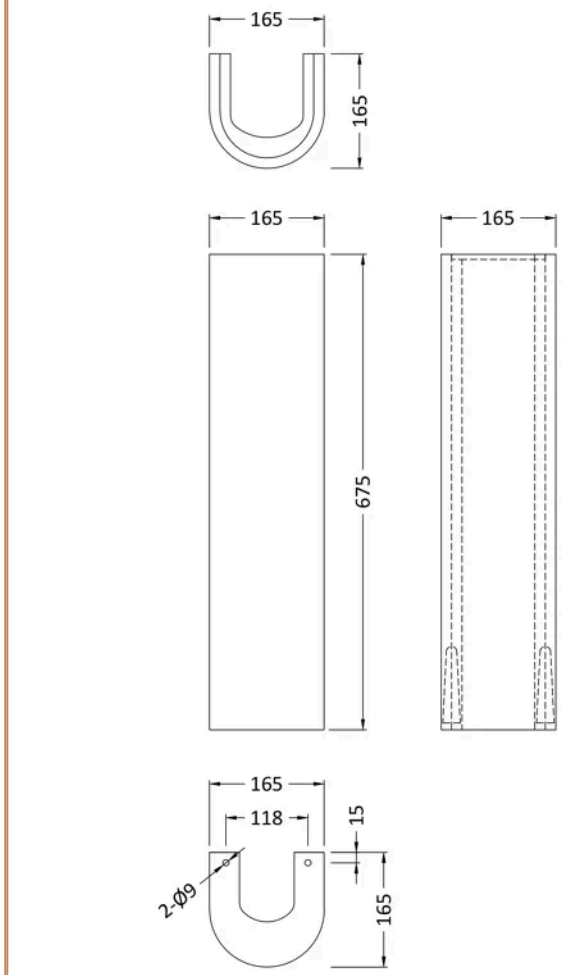

Product Dimensions

Product	675 x 165 x 165mm (H x W x D)
Packaged	700 x 170 x 190mm (H x W x D)
Nett Weight	9 kg
Packaged Weight	9.26 kg

Product Details

Country of Origin	China
Product Material	Vitreous China
Colour/Finish	White
Ce Certified	Yes

© ROXOR Group

Sales Code: NCS222 **Barcode:** 5060272822767 **Brand:** nuie **Description:** nuie Ivo 2 Tap Hole 550mm Ceramic Basin



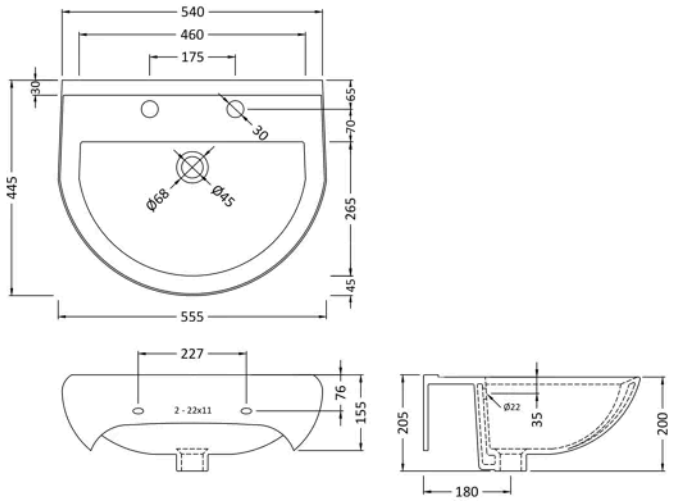

Product Dimensions

Product	205 x 540 x 445mm (H x W x D)
Packaged	215 x 580 x 480mm (H x W x D)
Nett Weight	15.6 kg
Packaged Weight	15.8 kg

Product Details

Country of Origin	China
Product Material	Vitreous China
Colour/Finish	White
Ce Certified	Yes
Inner Bowl Height	155 mm
No. Of Tapholes	2
Number Of Bowls	1

© ROXOR Group