Sales Code: M1290Q-E8 **Barcode:** 5055275815939 **Brand:** Hudson Reed **Description:** Hudson Reed Apex 1200mm Chrome Offset Quadrant Shower Enclosure



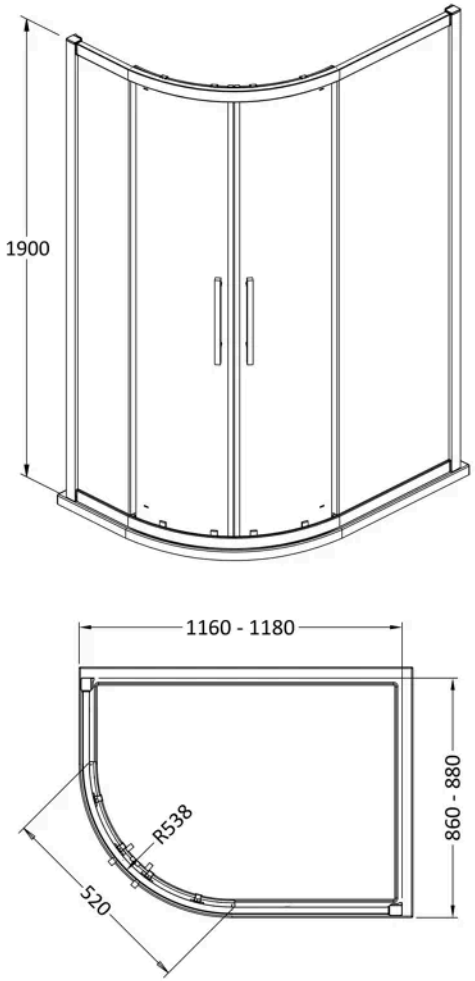

Product Dimensions

Product	1900 x 1180 x 880mm (H x W x D)
Packaged	3920 x 1100 x 175mm (H x W x D)
Nett Weight	77.6 kg
Packaged Weight	77.6 kg

Packaging Details

Box Qty	2

Product Details

Country of Origin	China
Product Material	Aluminium,Metal
Colour/Finish	Chrome
Style	Contemporary
Handle Type	D Shape
Fixings Included	Yes
Easy Clean	Yes
Adjustment Max	1160/1180
Adjustment Min	860/880
Ce Certified	Yes
Declaration Of Performance	Yes
Easy Fit	Yes
Enclosure Design	Framed
Entry Width	520 mm
Frame Finish	Chrome
Glass Thickness	8 mm
Handles Included	Yes
No. Doors	2
Ukca Certified	Yes
Wheel Type	Dual Quick Release

© ROXOR Group

Sales Code: M1290Q-E8A **Barcode:** 5055369075089 **Brand:** Hudson Reed **Description:** Apex 1200x900 OfF/Set Quad Pack A



Technical Drawing Not Available

Product Dimensions

Product	1900 x 900mm (H x W)
Packaged	1960 x 725 x 110mm (H x W x D)
Nett Weight	39.1 kg
Packaged Weight	39.1 kg

Packaging Details

Box Qty	1

Product Details

Country of Origin	China
Colour/Finish	Chrome
Style	Contemporary
Easy Clean	Yes
Adjustment Max	1200
Adjustment Min	1160
Ce Certified	Yes
Easy Fit	Yes
Enclosure Design	Framed
Frame Finish	Chrome
Glass Thickness	8 mm
No. Doors	2
Wheel Type	Dual Quick Release

© ROXOR Group

Sales Code: M1290Q-E8B **Barcode:** 5055369075096 **Brand:** Hudson Reed **Description:** Apex 1200x900 OfF/Set Quad Pack B



Technical Drawing Not Available

Product Dimensions

Product	1900 x 900mm (H x W)
Packaged	1940 x 430 x 90mm (H x W x D)
Nett Weight	38.5 kg
Packaged Weight	38.5 kg

Packaging Details

Box Qty	1

Product Details

Country of Origin	China
Product Material	Glass
Colour/Finish	Chrome
Style	Contemporary
Easy Clean	Yes
Adjustment Max	1200
Adjustment Min	1160
Ce Certified	Yes
Easy Fit	Yes
Enclosure Design	Framed
Frame Finish	Chrome
Glass Thickness	8 mm
No. Doors	2
Wheel Type	Dual Quick Release

© ROXOR Group