**Sales Code:** M1080QH4 **Barcode:** 5056462623689 **Brand:** Hudson Reed **Description:** Hudson Reed Apex 1000x800mm Chrome Offset Quadrant Shower Enclosure



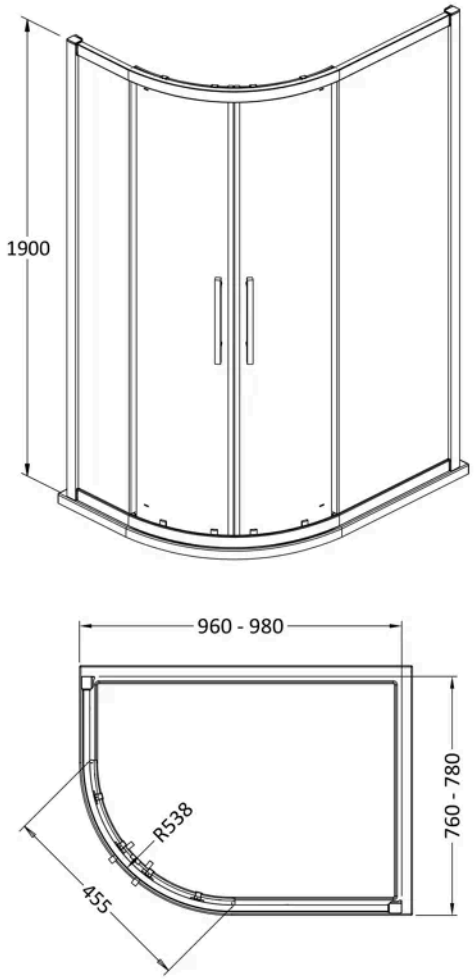


## Product Dimensions

| | |
|---|---|
| Product | 1900 x 980 x 780mm (H x W x D) |
| Nett Weight | 62.3 kg |
| Packaged Weight | 62.3 kg |

## Packaging Details

| | |
|---|---|
| Box Qty | 3 |

## Product Details

| | |
|---|---|
| Country of Origin | China |
| Product Material | Aluminium,Metal |
| Colour/Finish | Chrome |
| Style | Contemporary |
| Handle Type | D Shape |
| Fixings Included | Yes |
| Easy Clean | Yes |
| Adjustment Max | 960/980 |
| Adjustment Min | 760/780 |
| Ce Certified | Yes |
| Declaration Of Performance | Yes |
| Easy Fit | Yes |
| Enclosure Design | Framed |
| Entry Width | 455 mm |
| Frame Finish | Chrome |
| Glass Thickness | 8 mm |
| Handles Included | Yes |
| No. Doors | 2 |
| Radius | 538 mm |
| Ukca Certified | Yes |
| Wheel Type | Dual Quick Release |

© ROXOR Group

**Sales Code:** HAN1204AA **Barcode:** 5056462617893 **Brand:** Hudson Reed **Description:** Hudson Reed Apex 250mm Chrome Handle



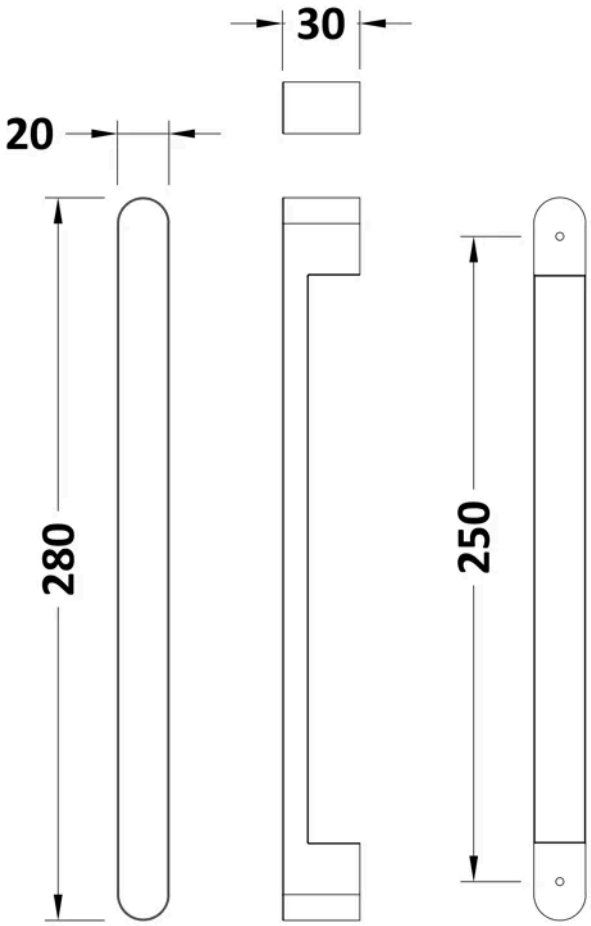


## Product Dimensions

| | |
|---|---|
| Product | 280 x 20 x 30mm (H x W x D) |
| Packaged | 74 x 30 x 200mm (H x W x D) |
| Nett Weight | 1 kg |
| Packaged Weight | 1 kg |

## Packaging Details

| | |
|---|---|
| Box Qty | 1 |

## Product Details

| | |
|---|---|
| Country of Origin | China |
| Product Material | Stainless Steel |
| Colour/Finish | Chrome |
| Style | Contemporary |

© ROXOR Group

**Sales Code:** M1080Q-E8 **Barcode:** 5055369080557 **Brand:** Hudson Reed **Description:** Hudson Reed Apex 1000 x 800mm Chrome Offset Quadrant Shower Enclosure



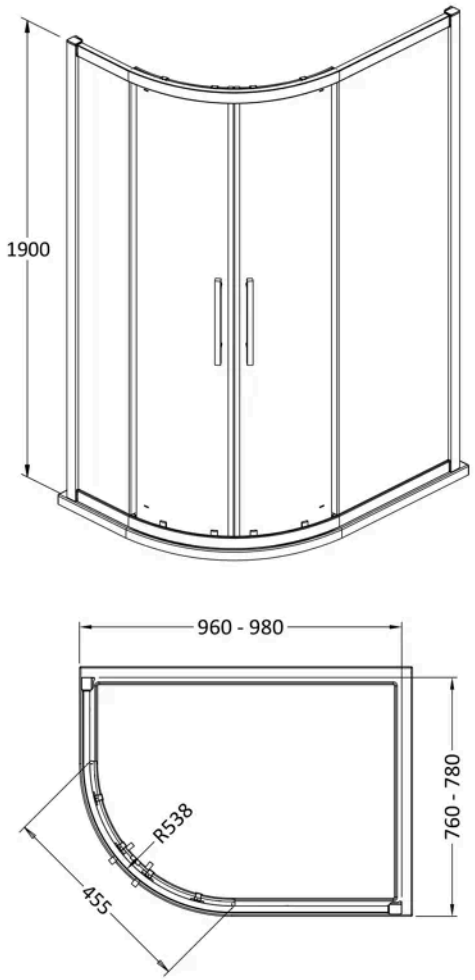


## Product Dimensions

| | |
|---|---|
| Product | 1900 x 980 x 780mm (H x W x D) |
| Packaged | 1960 x 485 x 155mm (H x W x D) |
| Nett Weight | 60.3 kg |
| Packaged Weight | 60.3 kg |

## Packaging Details

| | |
|---|---|
| Box Qty | 1 |
| Label Size (mm) | 50 x 100 |

## Product Details

| | |
|---|---|
| Country of Origin | China |
| Product Material | Aluminium,Metal |
| Colour/Finish | Chrome |
| Style | Contemporary |
| Handle Type | Square T Shape |
| Fixings Included | Yes |
| Easy Clean | Yes |
| Adjustment Max | 960/980 |
| Adjustment Min | 760/780 |
| Ce Certified | Yes |
| Declaration Of Performance | Yes |
| Easy Fit | Yes |
| Enclosure Design | Framed |
| Entry Width | 455 mm |
| Extras Included | Screw Cover Strip |
| Frame Finish | Chrome |
| Glass Thickness | 8 mm |
| Handles Included | Yes |
| No. Doors | 2 |
| Radius | 538 mm |
| Support Bar Included | No |
| Ukca Certified | Yes |
| Wheel Type | Dual Quick Release |

© ROXOR Group