Sales Code: M1000Q-E8 **Barcode:** 5055369080533 **Brand:** Hudson Reed **Description:** Hudson Reed Apex 1000mm Chrome Quadrant Shower Enclosure



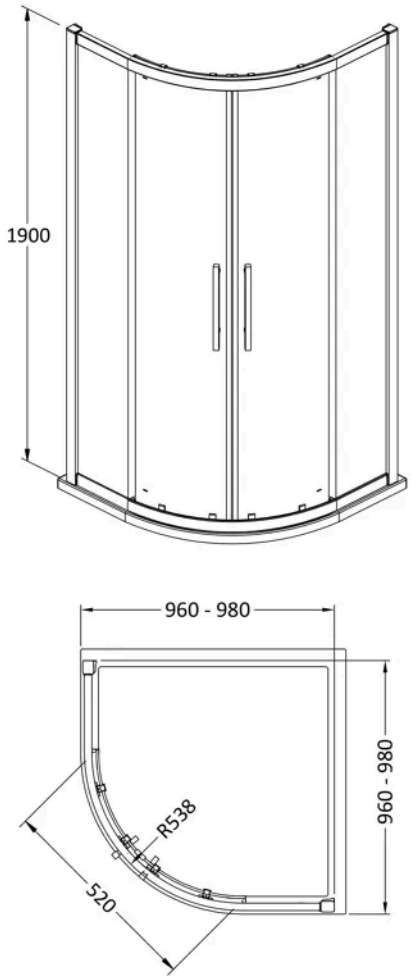

Product Dimensions

Product	1900 x 980 x 980mm (H x W x D)
Packaged	1960 x 540 x 155mm (H x W x D)
Nett Weight	67 kg
Packaged Weight	67 kg

Packaging Details

Box Qty	1
Label Size (mm)	50 x 100

Product Details

Country of Origin	China
Product Material	Aluminium,Metal
Colour/Finish	Chrome
Style	Contemporary
Handle Type	Square T Shape
Fixings Included	Yes
Easy Clean	Yes
Adjustment Max	980
Adjustment Min	960
Ce Certified	Yes
Declaration Of Performance	Yes
Easy Fit	Yes
Enclosure Design	Framed
Entry Width	520 mm
Extras Included	Screw Cover Strip
Frame Finish	Chrome
Glass Thickness	8 mm
Handles Included	Yes
No. Doors	2
Radius	538 mm
Support Bar Included	No
Ukca Certified	Yes
Wheel Type	Dual Quick Release

© ROXOR Group